EN

ISOTRA®

TECHNICAL MANUAL

EXTERIOR BLINDS – SELF-SUPPORTING SYSTEMS

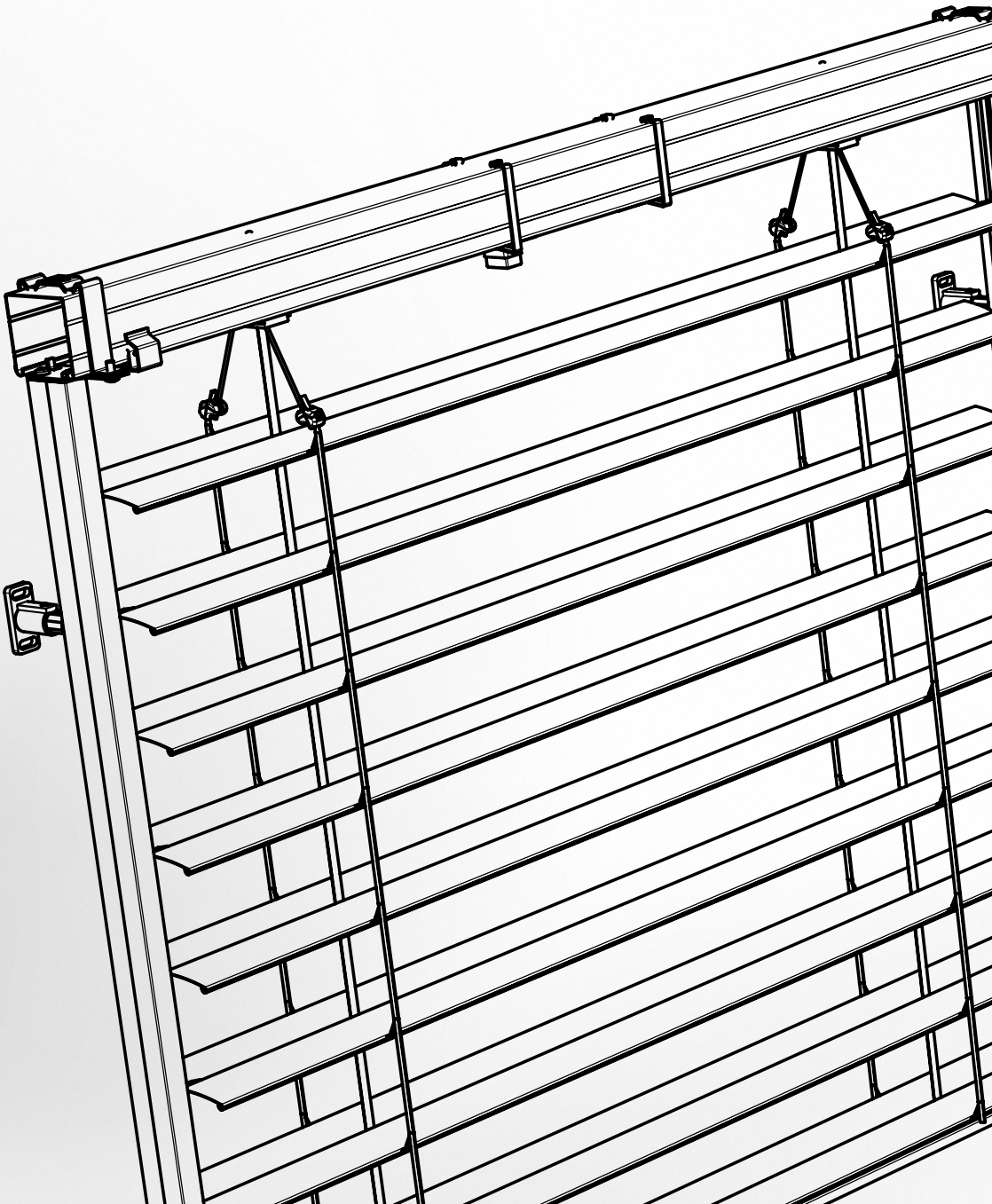

CONTENTS – EXTERIOR BLINDS – SELF-SUPPORTING SYSTEMS

STS CLASIC 3
STS CLASIC – Fe 3
Basic product specification
STS CLASIC – Al 11
Basic product specification
STS ALUMINIUM 19
Basic product specification
STS FIX 27
Basic product specification
VIVA 34
Basic product specification
BRAVO 51
Basic product specification

Types of cover sheets
see Technical Manual for Exterior Blinds
Measurement and assembly
see Technical Manual for Exterior Blinds and the separate Measurement and Assembly Manual

Products in this product group are always measured from the interior.

Due to continuous development of our products, we reserve the right to slight differences in design from the illustrations.

ISOTRA *Quality*

A brand that symbolises many years of tradition, incalculable investment in own research & development, use of quality materials, technological maturity, reliable work of hundreds of employees, and many other parameters that make up one whole – the final ISOTRA product

STS CLASSIC

STS CLASSIC – Fe

Basic product specification

Installation to the façade, reveal

Suitable for all types of exterior blinds with the upper profile 56×58 mm, Fe.
Max. width for self-supporting blinds: 2.4 m. For greater widths, the upper profile must be fixed.
For widths exceeding 2.4 m, upper profile hangers P 002/10 will be supplied automatically.
Possibility to couple up to 3 blinds.

Components needed:
- self-supporting guide rail P 016/1 (simple), self-supporting guide rail P 016/2 (double),
- self-supporting guide rail P 016/3 (simple) with PVC insert P 018/5, tongs for the PVC insert
- holders for self-supporting guide rails P 021/5 and P 021/6, P 021/17 – P 021/47
- upper profile hanger P 002/42 and offset upper profile hanger P 002/41 (for handle) for simple guide rail P 016/1, upper profile hanger P 002/14 for double guide rail P 016/2, upper profile hanger P 003/7 for guide rail P016/3

- **Version with Fe upper profile 56×58 mm**

Standard blind dimensions:

	Width (mm)		Height (mm)		Guaranteed area [m²]
	min.	max.	min.	max.	max.
STS CLASSIC blind – motor	600	2400	500	4000	16
STS CLASSIC blind – handle	600	2400	500	4000	8

Attention: The upper profile hanger dimension (8 mm) will be added to the installation dimensions.

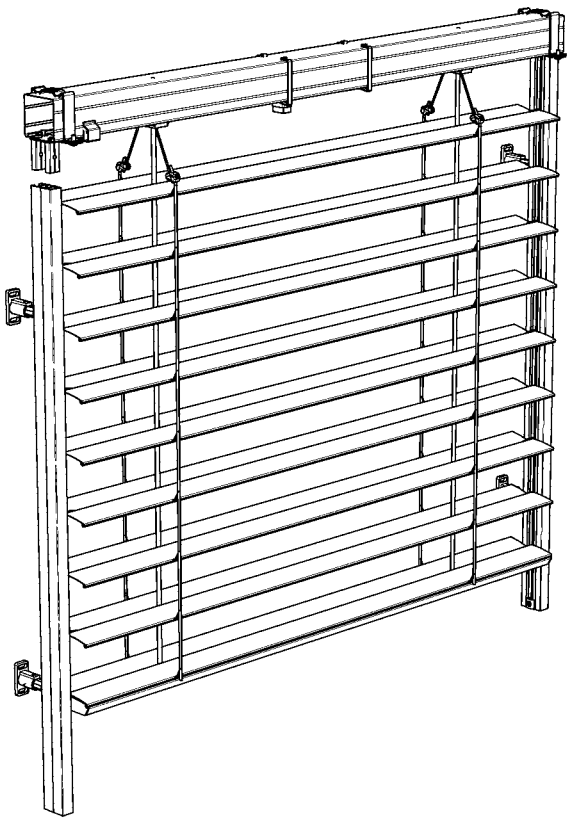

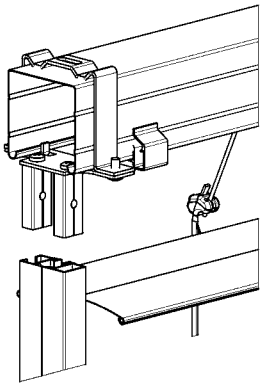

STS CLASIC – Fe (2-01910-0000)

Guide rail STS P 016/1 (7-302121-PU52)

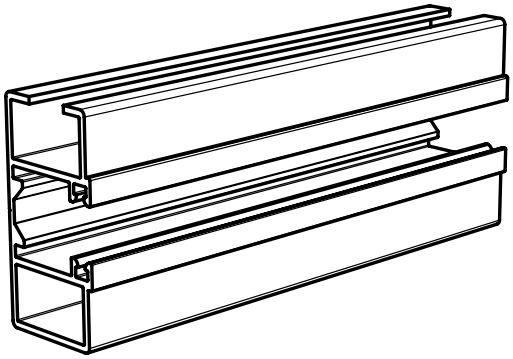

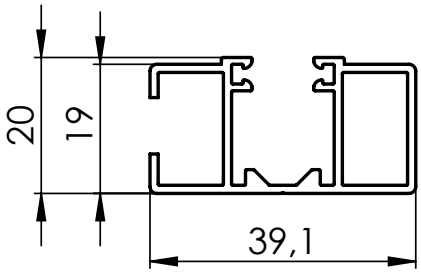

Upper profile hanger with holder P 002/42 (6-015779-0000) for guide rail P 016/1

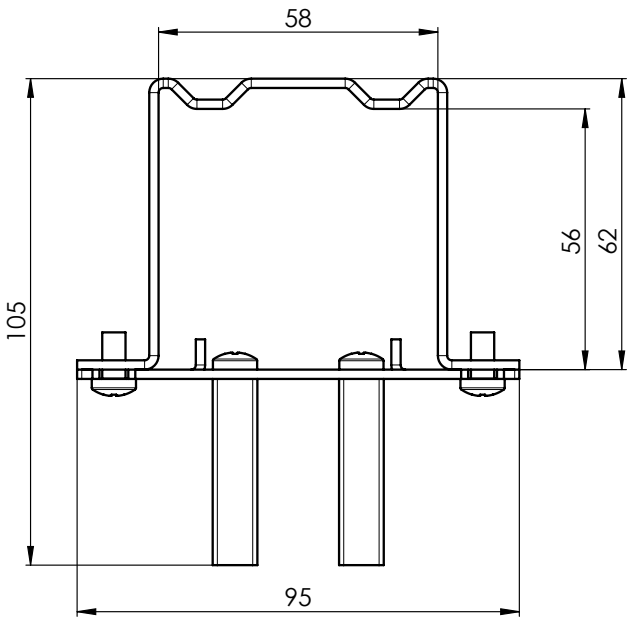

Offset upper profile hanger P 002/41 (2-01414-0000) incl. the upper profile hanger for guide rail P 016/1

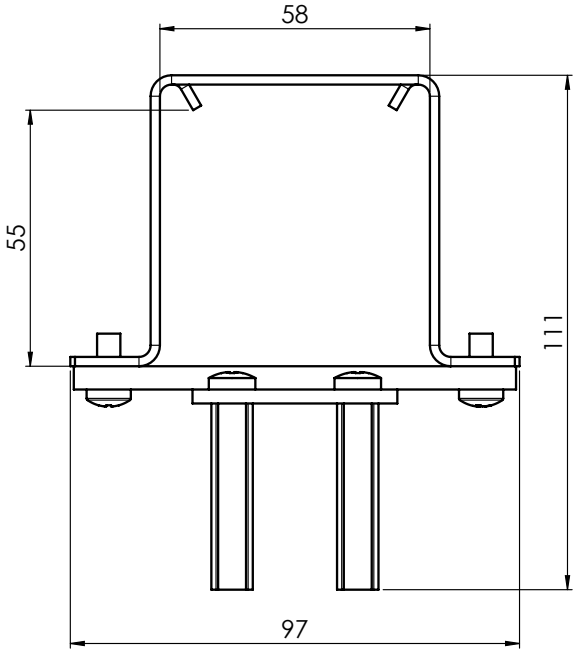

Double guide rail STS P 016/2 (7-303530-0000)

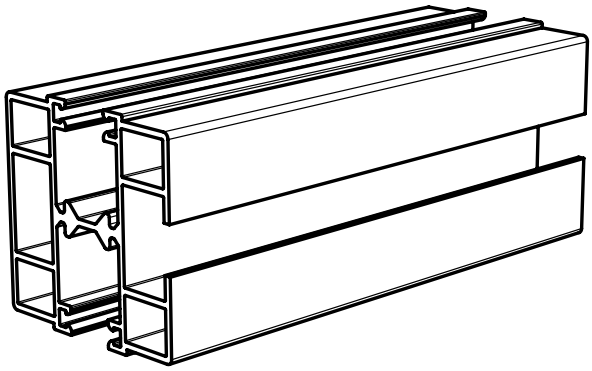

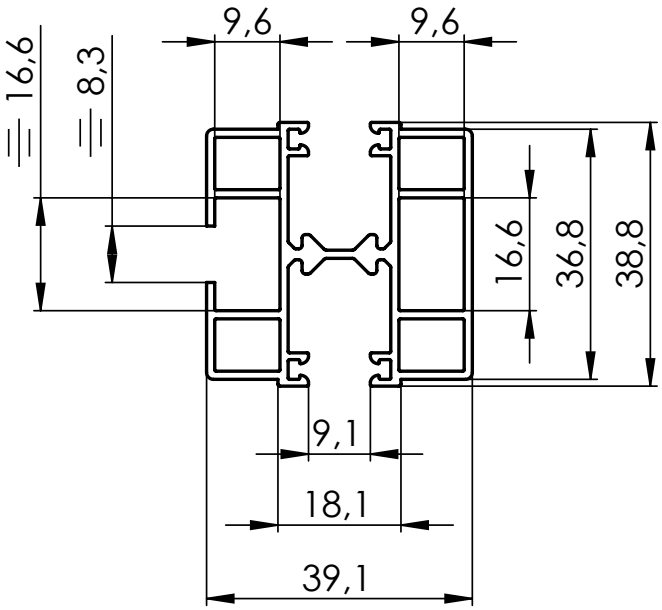

Double upper profile hanger Fe P 002/14 (2-01684-0000) for double guide rail STS P 016/2

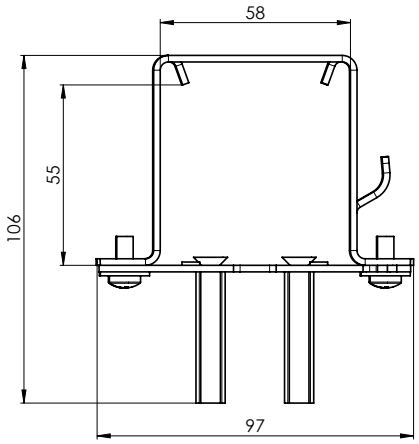

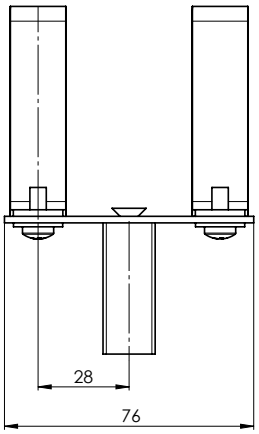

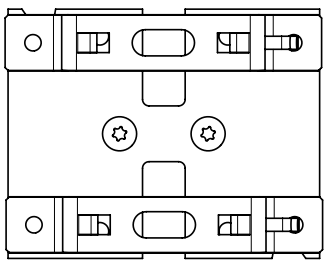

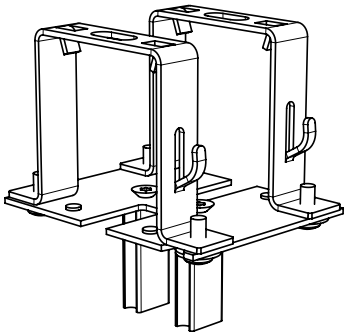

Guide rail P016/3 (3-04380-PU11)

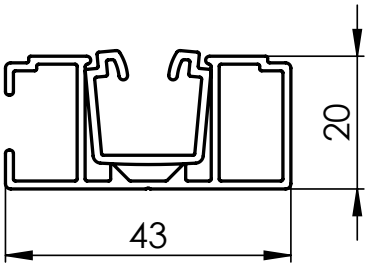

Upper profile hanger P 003/7 (2-01881-0000) for simple guide rail P 016/3

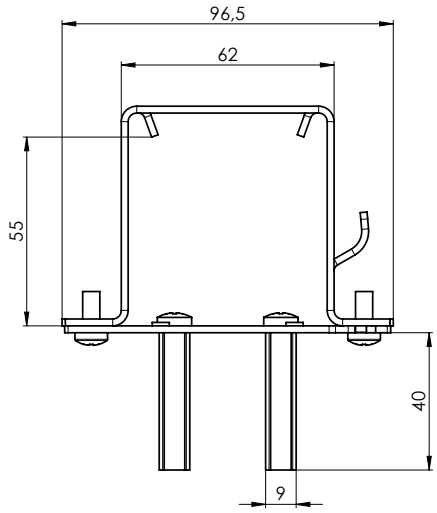

Guide rail insert FIX P 018/5FIX II
- Black (7-304355-9017)
- Grey (7-304355-7035)

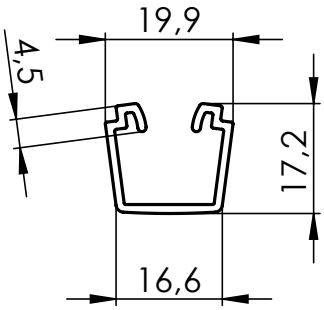

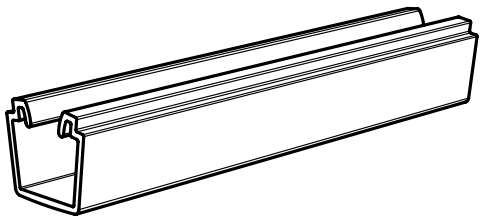

We recommend ordering tongs 3-04434-0000 for pulling up the PVC insert.

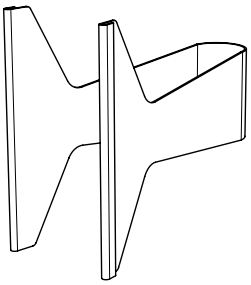

Guide rail holder P 021/5 (2-00582-PU11)

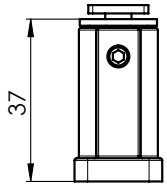

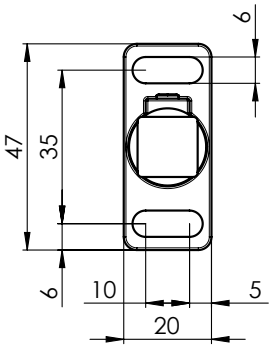

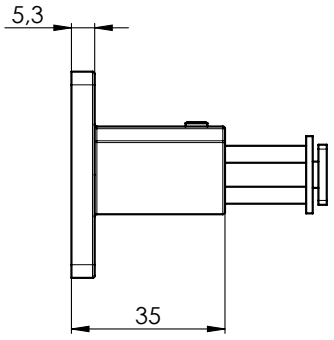

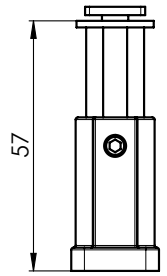

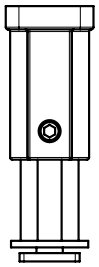

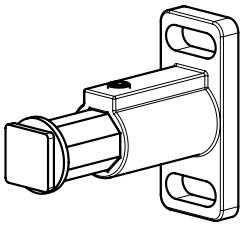

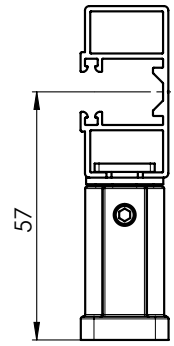

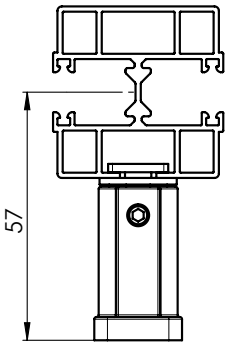

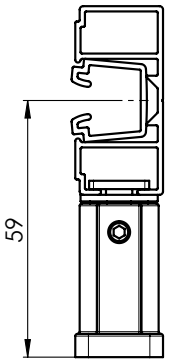

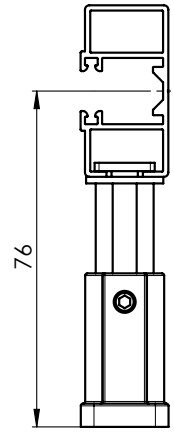

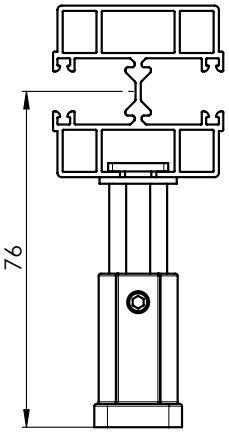

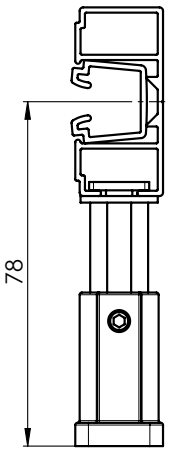

for P 016/1 for P 016/2 for P 016/3

Guide rail holder P 021/6 (2-00583-PU11)

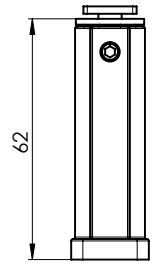

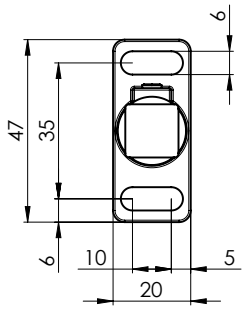

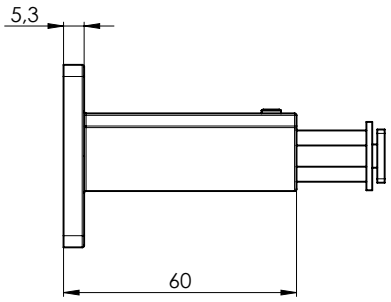

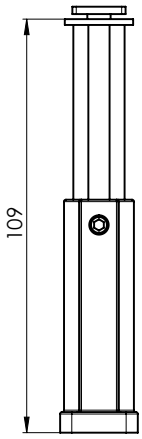

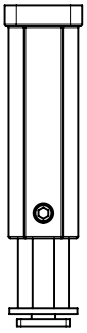

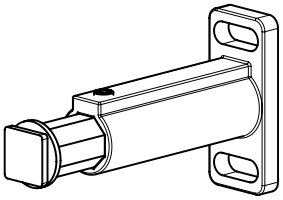

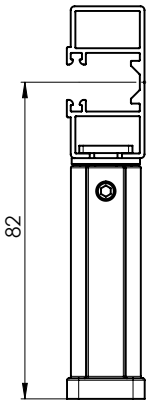

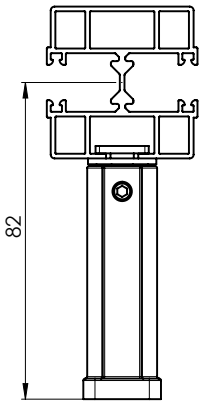

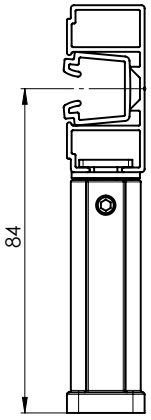

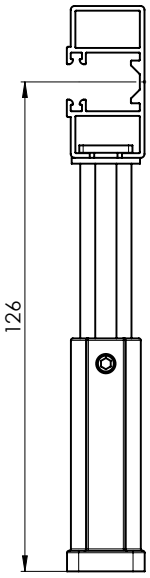

for P 016/1

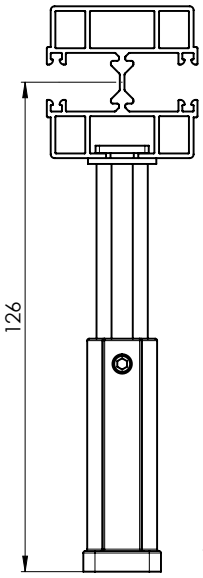

for P 016/2

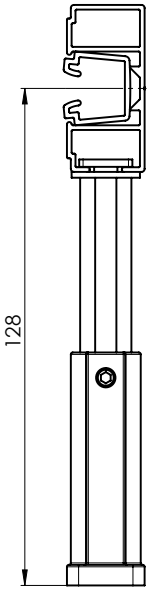

for P 016/3

Overview of guide rail holders for the self-supporting systems

item name	trade name	drawing number
Guide rail holder STS – 80 mm, anodised	P 021/17 PU 52	2-01714-PU52
Guide rail holder STS – 8 5mm, anodised	P 021/18 PU 52	2-01715-PU52
Guide rail holder STS – 90 mm, anodised	P 021/19 PU 52	2-01716-PU52
Guide rail holder STS – 95 mm, anodised	P 021/20 PU 52	2-01717-PU52
Guide rail holder STS – 100 mm, anodised	P 021/21 PU 52	2-01718-PU52
Guide rail holder STS – 105 mm, anodised	P 021/22 PU 52	2-01719-PU52
Guide rail holder STS – 110 mm, anodised	P 021/23 PU 52	2-01720-PU52
Guide rail holder STS – 115 mm, anodised	P 021/24 PU 52	2-01721-PU52
Guide rail holder STS – 120 mm, anodised	P 021/25 PU 52	2-01722-PU52
Guide rail holder STS – 125 mm, anodised	P 021/26 PU 52	2-01723-PU52
Guide rail holder STS – 130 mm, anodised	P 021/27 PU 52	2-01724-PU52
Guide rail holder STS – 135 mm, anodised	P 021/28 PU 52	2-01725-PU52
Guide rail holder STS – 140 mm, anodised	P 021/29 PU 52	2-01726-PU52
Guide rail holder STS – 145 mm, anodised	P 021/30 PU 52	2-01727-PU52
Guide rail holder STS – 150 mm, anodised	P 021/31 PU 52	2-01728-PU52
Guide rail holder STS – 155 mm, anodised	P 021/32 PU 52	2-01729-PU52
Guide rail holder STS – 160 mm, anodised	P 021/33 PU 52	2-01730-PU52
Guide rail holder STS – 165 mm, anodised	P 021/34 PU 52	2-01731-PU52
Guide rail holder STS – 170 mm, anodised	P 021/35 PU 52	2-01732-PU52
Guide rail holder STS – 175 mm, anodised	P 021/36 PU 52	2-01733-PU52
Guide rail holder STS – 180 mm, anodised	P 021/37 PU 52	2-01734-PU52
Guide rail holder STS – 185 mm, anodised	P 021/38 PU 52	2-01735-PU52
Guide rail holder STS – 190 mm, anodised	P 021/39 PU 52	2-01736-PU52
Guide rail holder STS – 195 mm, anodised	P 021/40 PU 52	2-01737-PU52
Guide rail holder STS – 200 mm, anodised	P 021/41 PU 52	2-01738-PU52
Guide rail holder STS – 205 mm, anodised	P 021/42 PU 52	2-01739-PU52
Guide rail holder STS – 210 mm, anodised	P 021/43 PU 52	2-01740-PU52
Guide rail holder STS – 215 mm, anodised	P 021/44 PU 52	2-01741-PU52
Guide rail holder STS – 220 mm, anodised	P 021/45 PU 52	2-01742-PU52
Guide rail holder STS – 225 mm, anodised	P 021/46 PU 52	2-01743-PU52
Guide rail holder STS – 230 mm, anodised	P 021/47 PU 52	2-01744-PU52

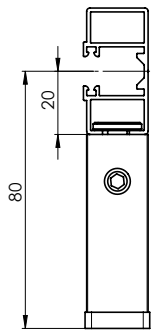

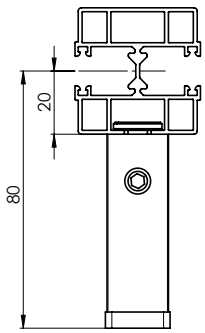

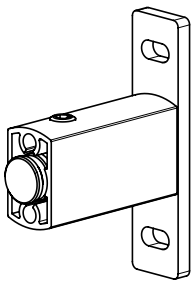

STS CLASIC – Fe (2-01910-0000)

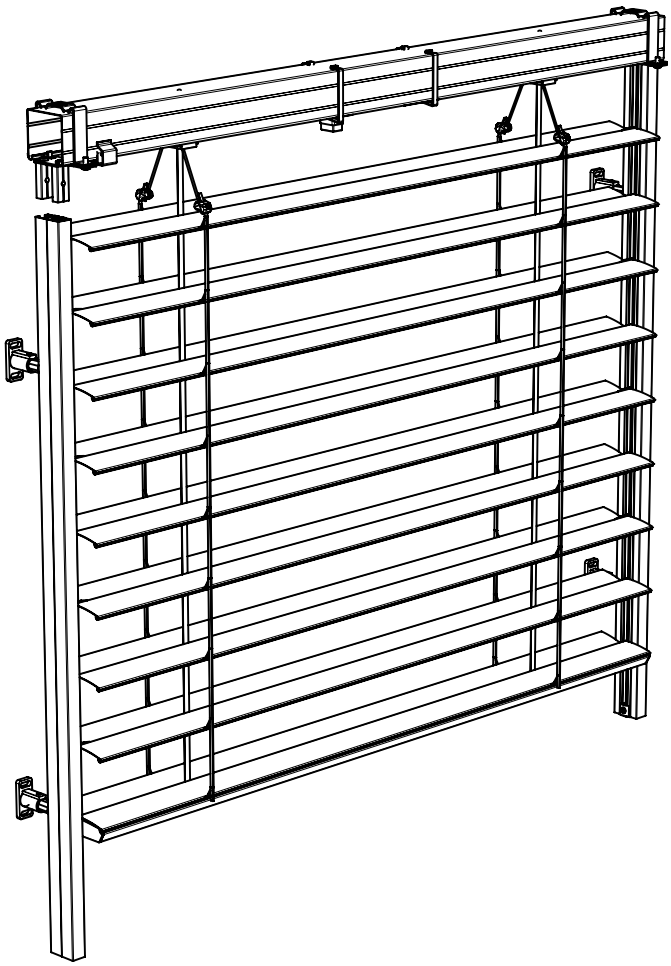

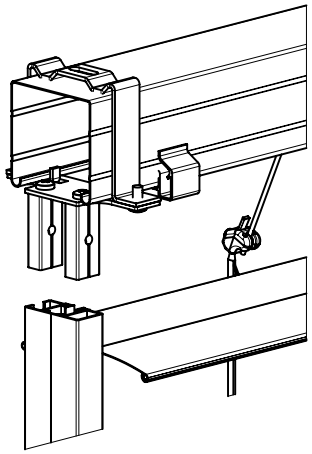

STS CLASSIC – Al

Basic product specification

Installation to the façade, reveal

Suitable for all types of exterior blinds with the upper profile 58×60 mm, Al.
Max. width for self-supporting blinds: 3.5 m. For greater widths, the upper profile must be fixed.
For widths exceeding 3.5 m, upper profile hangers P 002/11 will be supplied automatically.
Possibility to couple up to 3 blinds.

Components needed:

- self-supporting guide rail P 016/1 (simple) and self-supporting guide rail P 016/2 (double), self-supporting guide rail P016/3 (simple) with PVC insert P018/5, tongs for the PVC insert
- holders for self-supporting guide rails P 021/5 and P 021/6, P 021/17 – P 021/47
- upper profile hanger P 002/6 and offset upper profile hanger P 002/61 (for handle) for simple guide rail P 016/1, upper profile hanger P 002/9 for double guide rail P 016/2, upper profile hanger P 003/6 for guide rail P016/3

- **Version with Al upper profile 58×60 mm**

Standard blind dimensions:

	Width (mm)		Height (mm)		Guaranteed area [m²]
	min.	max.	min.	max.	max.
blind STS CLASSIC Al – motor	600	3500	500	4000	16
blind STS CLASSIC Al – handle	600	3500	500	4000	8

Attention: The upper profile hanger dimension (8 mm) will be added to the installation dimensions.

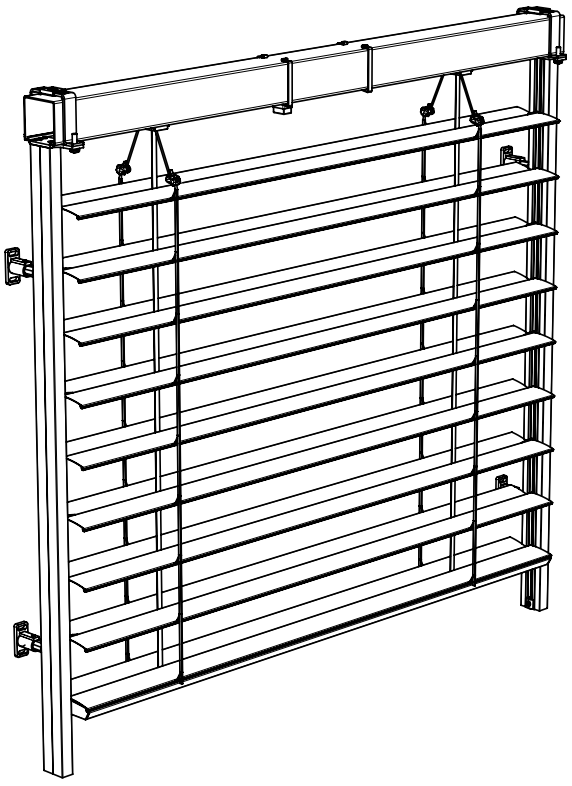

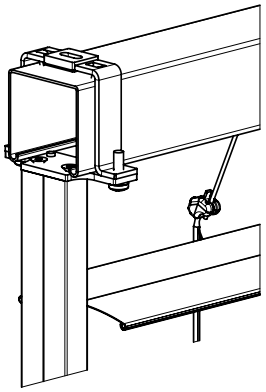

STS CLASIC – Al (2-01910-0000)

Guide rail STS P 016/1 (7-302121-PU52)

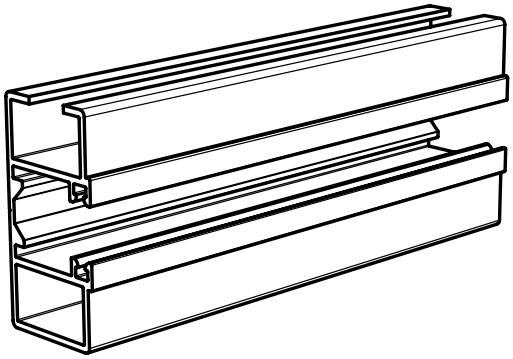

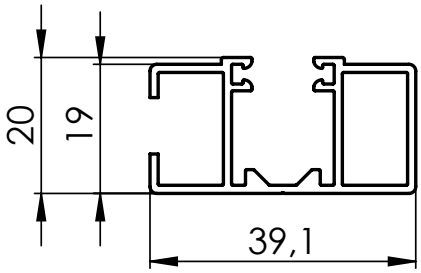

Upper profile hanger – AL PROFILE STS,
P 002/6 (2-01093-0000)

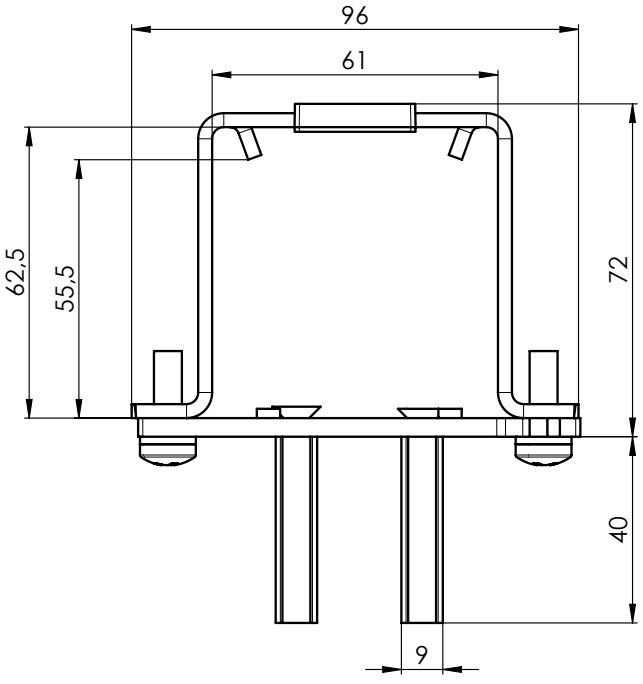

Offset upper profile hanger Al for STS,
P 002/61 (2-01413-0000)

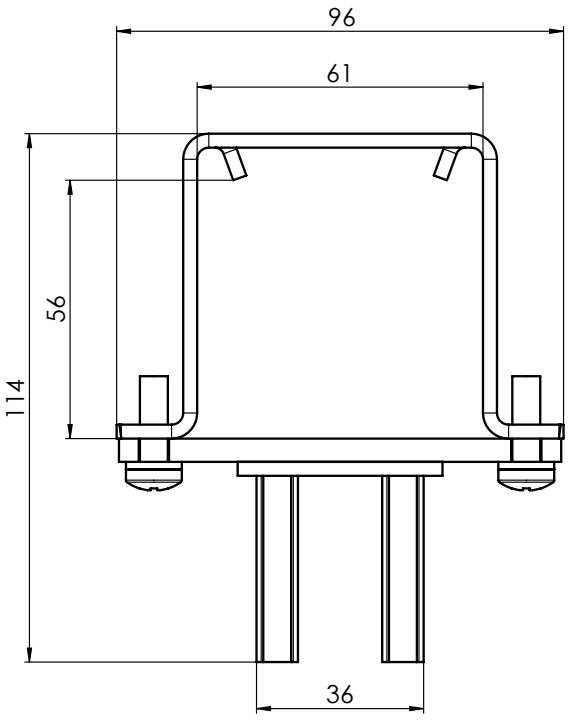

Double guide rail STS P 016/2 (7-303530-0000)

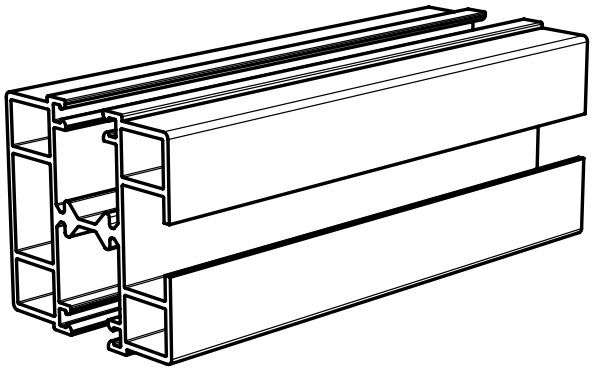

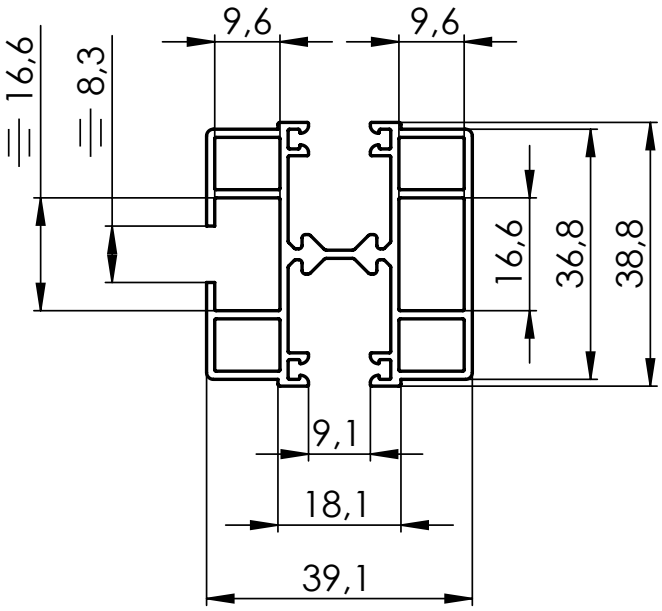

Double hanger Al P 002/9 (2-01628-0000) for double guide rail STS P 016/2

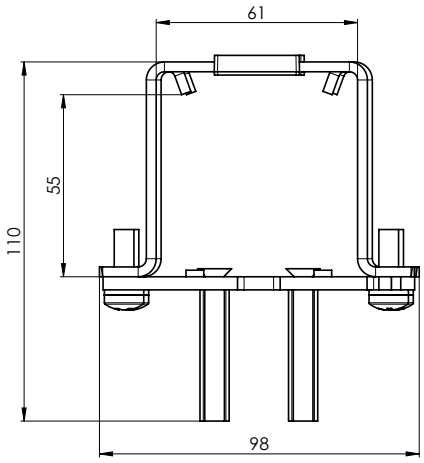

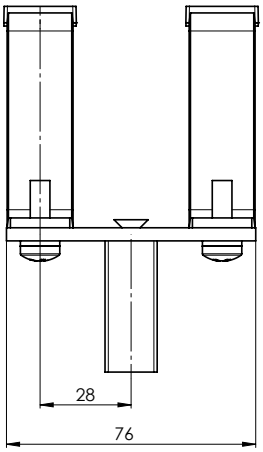

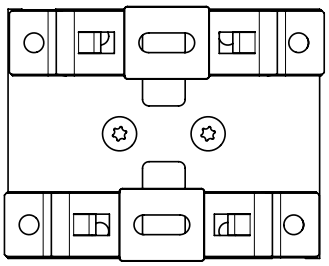

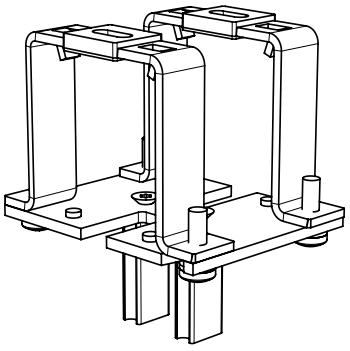

Guide rail P016/3 (3-04380-PU11)

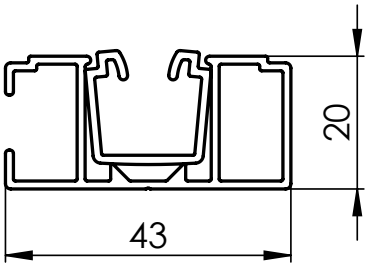

Upper profile hanger P 003/6 (2-01880-0000) for simple guide rail P 016/3

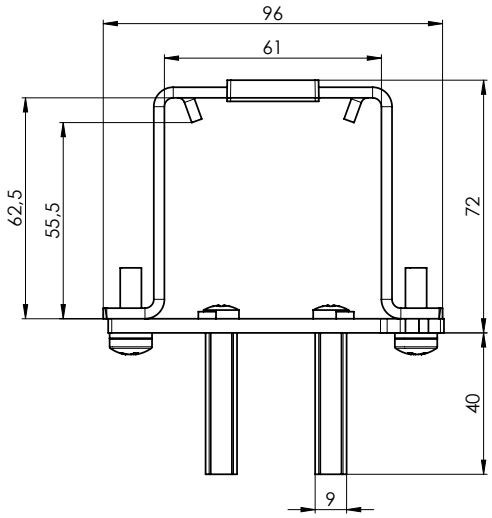

Guide rail insert FIX P 018/5FIX II
- Black (7-304355-9017)
- Grey (7-304355-7035)

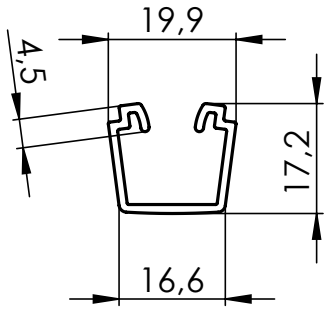

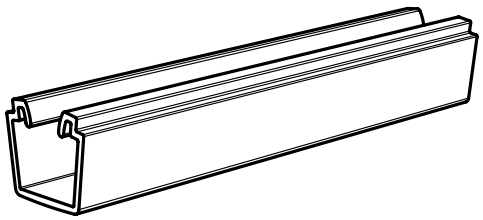

We recommend ordering tongs 3-04434-0000 for pulling up the PVC insert.

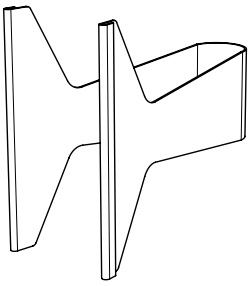

Guide rail holder P 021/5 (2-00582-PU11)

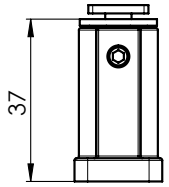

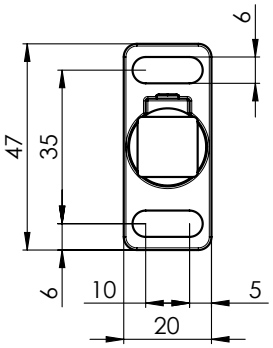

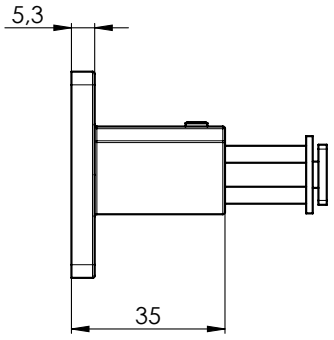

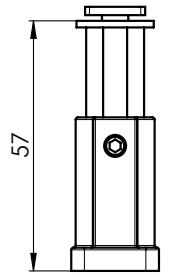

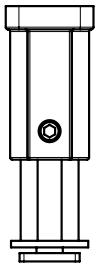

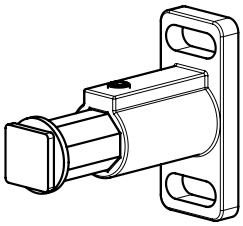

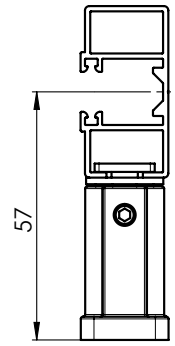

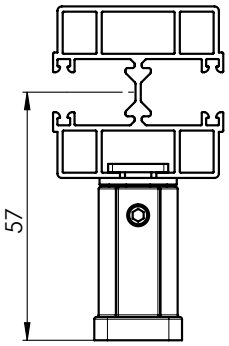

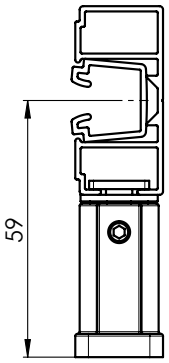

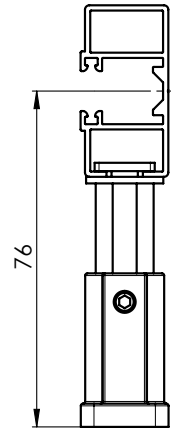

for P 016/1

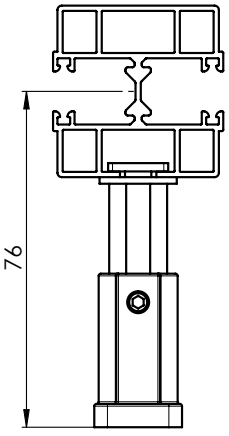

for P 016/2

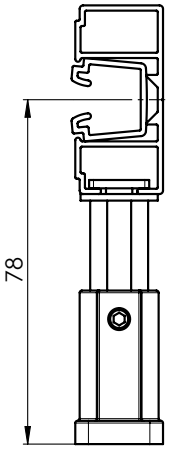

for P 016/3

Guide rail holder P 021/6 (2-00583-PU11)

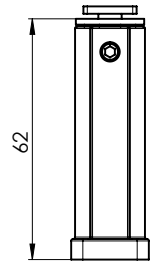

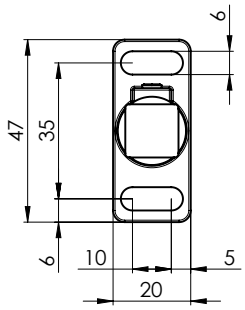

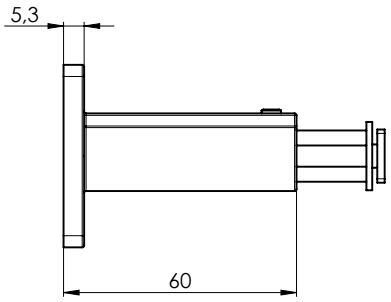

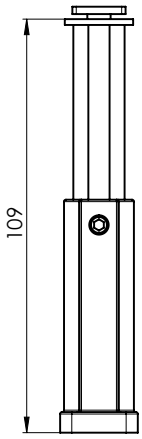

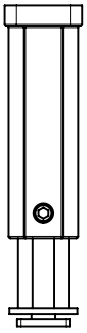

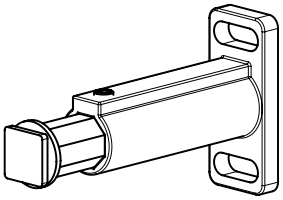

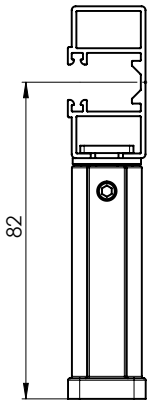

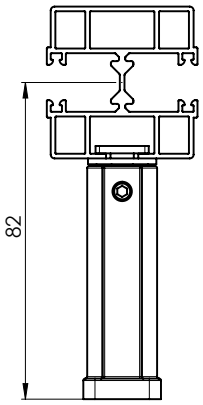

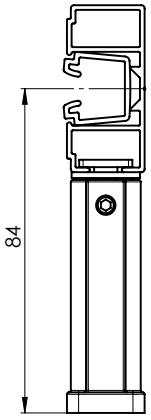

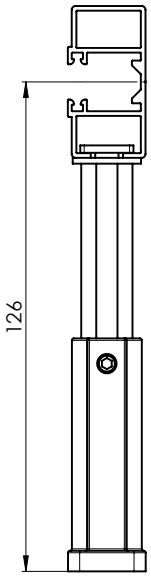

for P 016/1

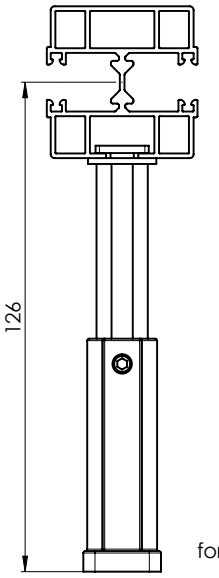

for P 016/2

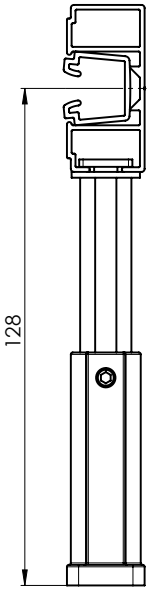

for P 016/3

Overview of guide rail holders for the self-supporting systems

item name	trade name	drawing number
Guide rail holder STS – 80 mm, anodised	P 021/17 PU 52	2-01714-PU52
Guide rail holder STS – 8 5mm, anodised	P 021/18 PU 52	2-01715-PU52
Guide rail holder STS – 90 mm, anodised	P 021/19 PU 52	2-01716-PU52
Guide rail holder STS – 95 mm, anodised	P 021/20 PU 52	2-01717-PU52
Guide rail holder STS – 100 mm, anodised	P 021/21 PU 52	2-01718-PU52
Guide rail holder STS – 105 mm, anodised	P 021/22 PU 52	2-01719-PU52
Guide rail holder STS – 110 mm, anodised	P 021/23 PU 52	2-01720-PU52
Guide rail holder STS – 115 mm, anodised	P 021/24 PU 52	2-01721-PU52
Guide rail holder STS – 120 mm, anodised	P 021/25 PU 52	2-01722-PU52
Guide rail holder STS – 125 mm, anodised	P 021/26 PU 52	2-01723-PU52
Guide rail holder STS – 130 mm, anodised	P 021/27 PU 52	2-01724-PU52
Guide rail holder STS – 135 mm, anodised	P 021/28 PU 52	2-01725-PU52
Guide rail holder STS – 140 mm, anodised	P 021/29 PU 52	2-01726-PU52
Guide rail holder STS – 145 mm, anodised	P 021/30 PU 52	2-01727-PU52
Guide rail holder STS – 150 mm, anodised	P 021/31 PU 52	2-01728-PU52
Guide rail holder STS – 155 mm, anodised	P 021/32 PU 52	2-01729-PU52
Guide rail holder STS – 160 mm, anodised	P 021/33 PU 52	2-01730-PU52
Guide rail holder STS – 165 mm, anodised	P 021/34 PU 52	2-01731-PU52
Guide rail holder STS – 170 mm, anodised	P 021/35 PU 52	2-01732-PU52
Guide rail holder STS – 175 mm, anodised	P 021/36 PU 52	2-01733-PU52
Guide rail holder STS – 180 mm, anodised	P 021/37 PU 52	2-01734-PU52
Guide rail holder STS – 185 mm, anodised	P 021/38 PU 52	2-01735-PU52
Guide rail holder STS – 190 mm, anodised	P 021/39 PU 52	2-01736-PU52
Guide rail holder STS – 195 mm, anodised	P 021/40 PU 52	2-01737-PU52
Guide rail holder STS – 200 mm, anodised	P 021/41 PU 52	2-01738-PU52
Guide rail holder STS – 205 mm, anodised	P 021/42 PU 52	2-01739-PU52
Guide rail holder STS – 210 mm, anodised	P 021/43 PU 52	2-01740-PU52
Guide rail holder STS – 215 mm, anodised	P 021/44 PU 52	2-01741-PU52
Guide rail holder STS – 220 mm, anodised	P 021/45 PU 52	2-01742-PU52
Guide rail holder STS – 225 mm, anodised	P 021/46 PU 52	2-01743-PU52
Guide rail holder STS – 230 mm, anodised	P 021/47 PU 52	2-01744-PU52

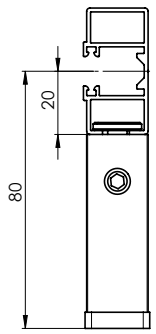

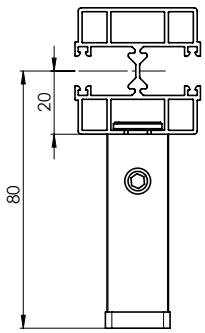

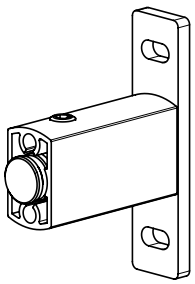

STS CLASIC – Al (2-01910-0000)

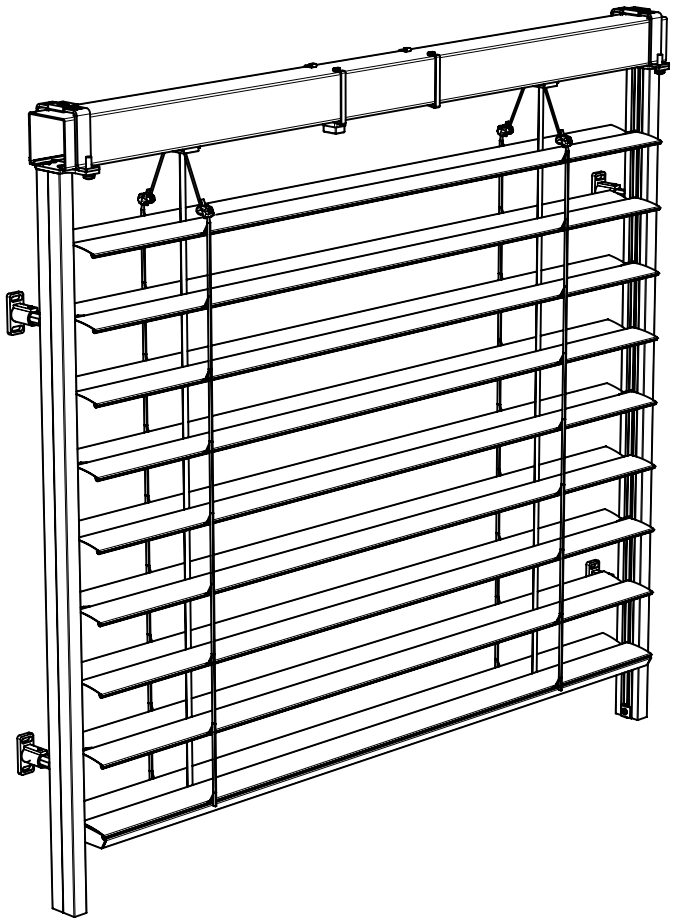

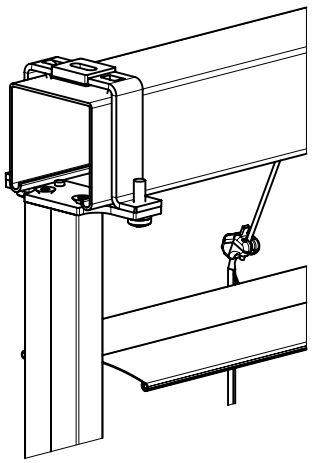

STS ALUMINIUM

Basic product specification

Installation to the façade, reveal

Suitable for all types of exterior blinds with upper profile 58×60 mm, Al.
Max. width for self-supporting blinds: 4 m.
Simple and fast installation.
Suitable for motorised control, possibility to couple 2 blinds.

Components needed:
- self-supporting guide rail P 016/1 (simple) and P 016/2 (double), self-supporting guide rail P016/3 (simple) with PVC insert P018/5, tongs for the PVC insert
- holders for self-supporting guide rails P 021/5 and P 021/6, P 021/17 – P 021/47
- special hanger for attaching the Al profile with brace over the whole upper profile width

- **Version with Al upper profile 58×60 mm and aluminium brace**

Standard blind dimensions:

	Width (mm)		Height (mm)		Guaranteed area [m²]
	min.	max.	min.	max.	max.
blind STS ALUMINIUM	600	4000	500	4000	16

Attention: The Al brace profile is always supplied. The profile with the brace will increase the installation height by 18 mm!

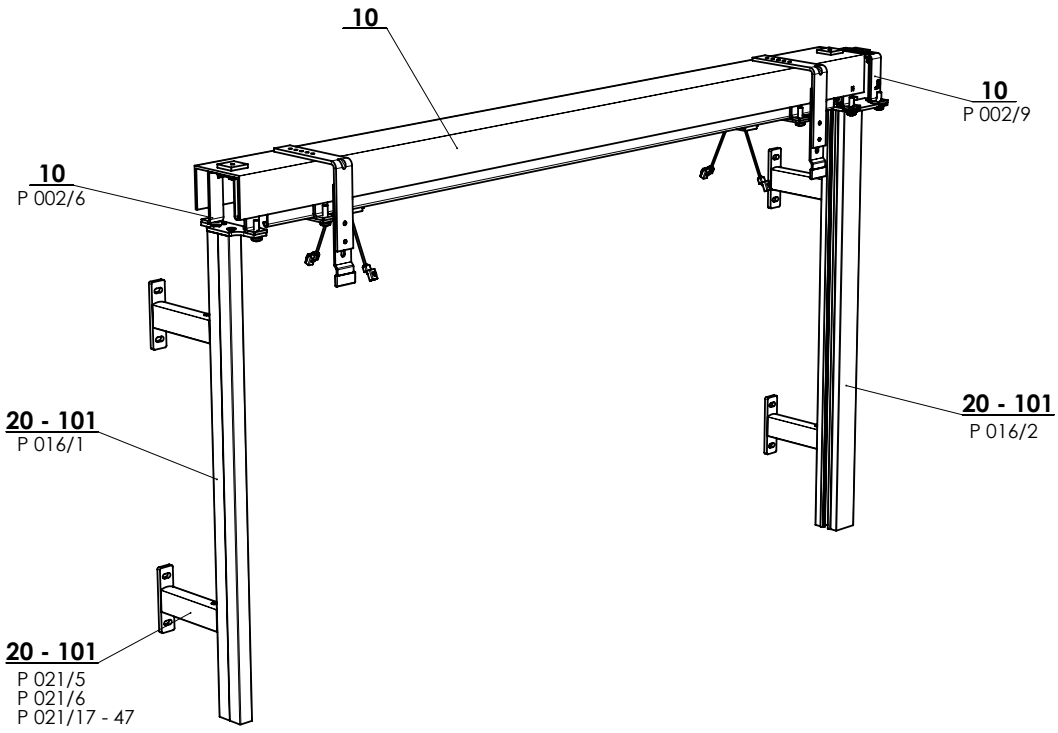

STS ALUMINIUM (2-01630-0000)

Guide rail STS P 016/1 (7-302121-PU52)

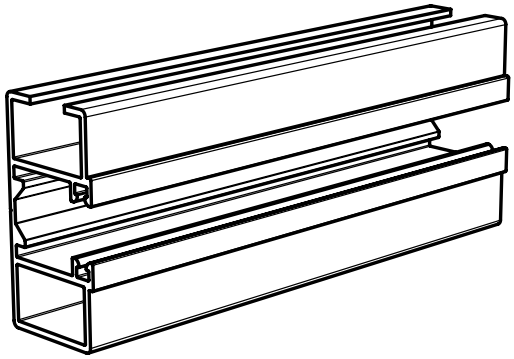

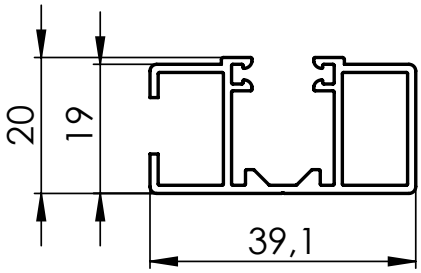

Upper profile hanger – AL PROFILE STS, P002/6
(2-01093-0000)

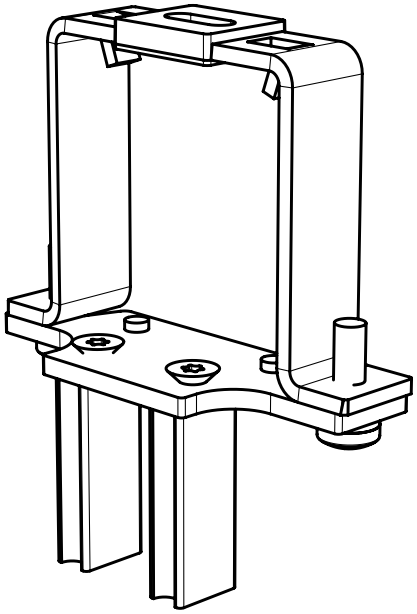

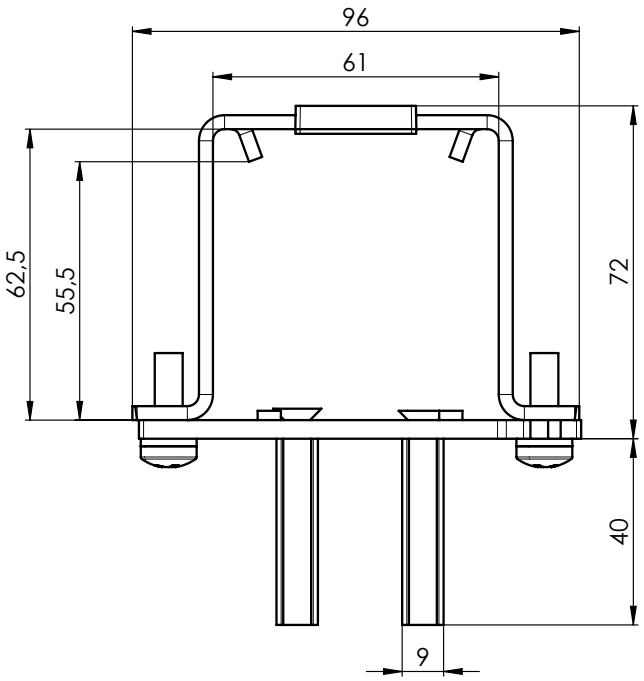

Double guide rail STS P 016/2 (7-303530-0000)

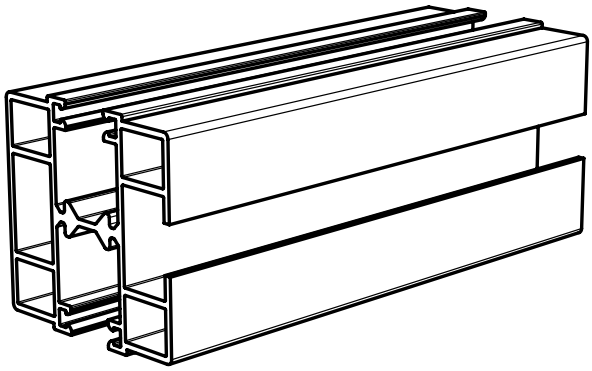

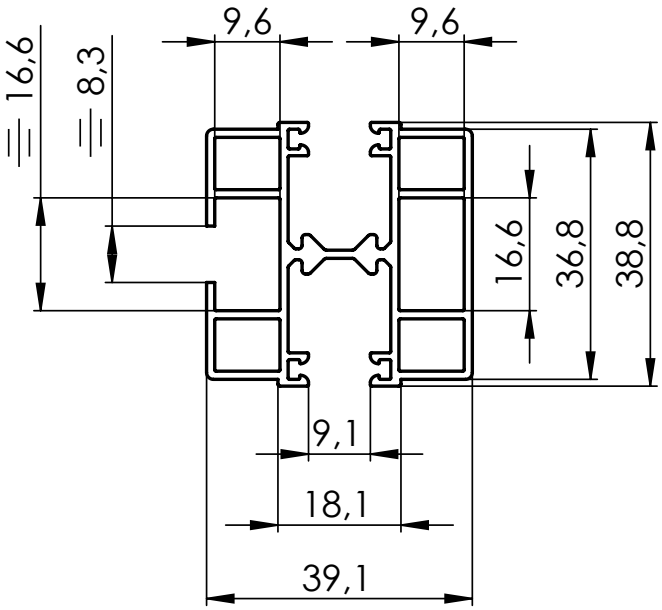

Double upper profile hanger P002/9 (2-01628-0000) for double guide rail STS P 016/2

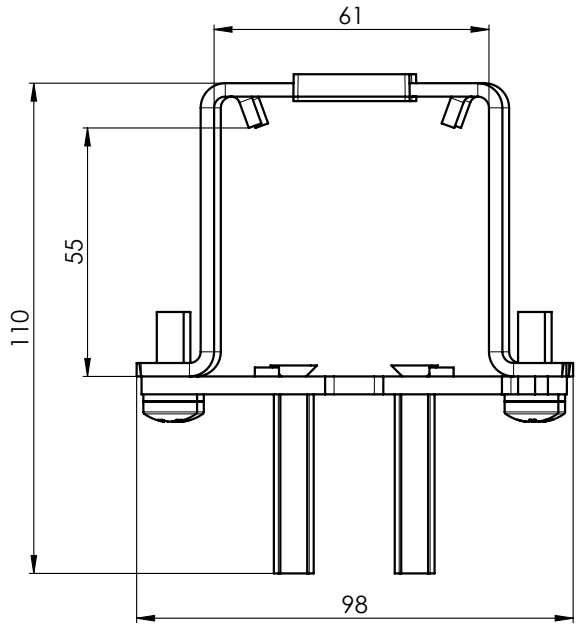

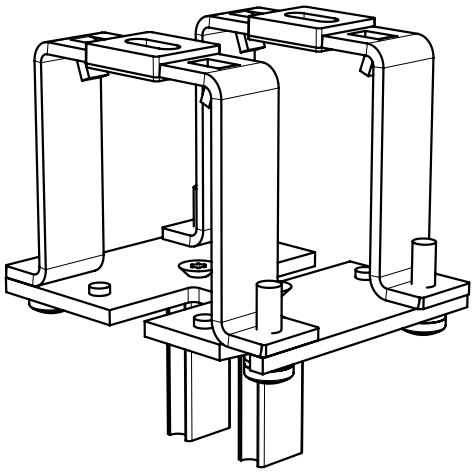

Guide rail P016/3 (3-04380-PU11)

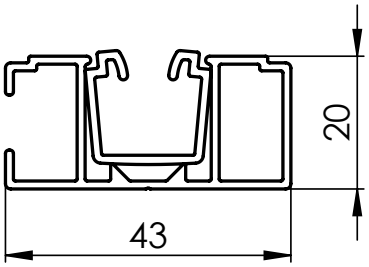

Upper profile hanger P 003/6 (2-01880-0000) for simple guide rail P 016/3

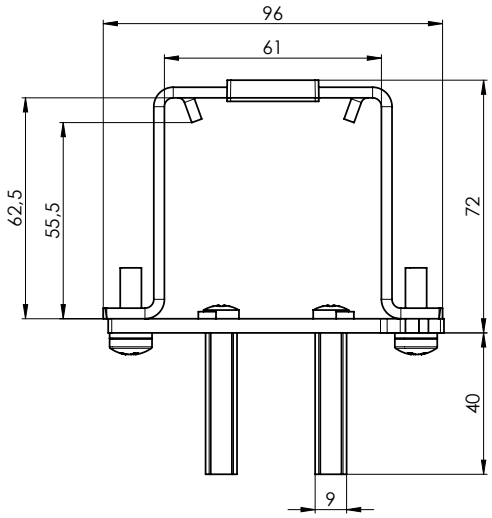

Guide rail insert FIX P 018/5FIX II
- Black (7-304355-9017)
- Grey (7-304355-7035)

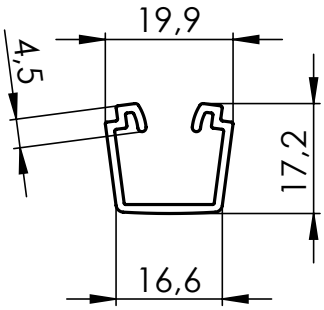

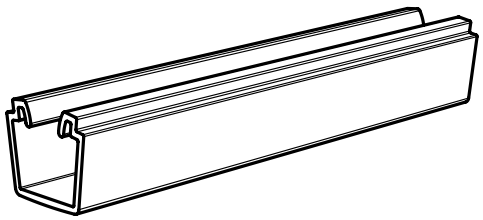

We recommend ordering tongs 3-04434-0000 for pulling up the PVC insert.

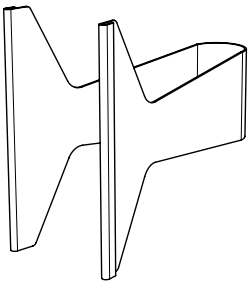

Guide rail holder P 021/5 (2-00582-PU11)

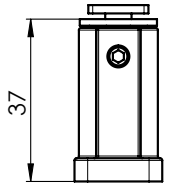

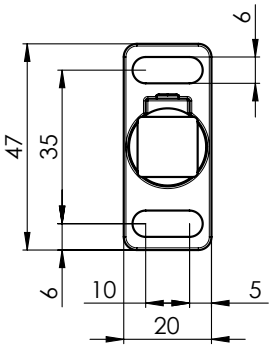

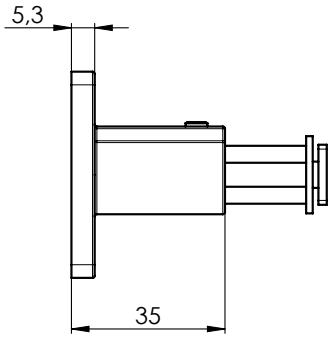

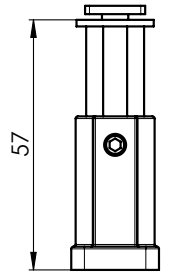

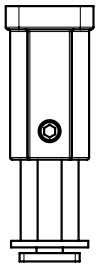

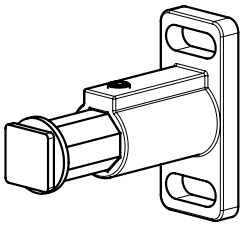

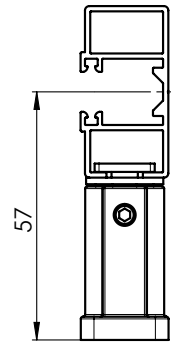

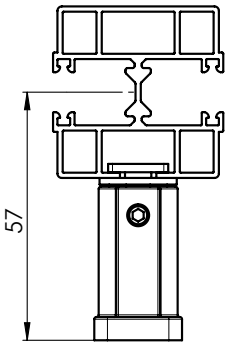

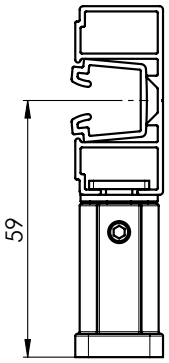

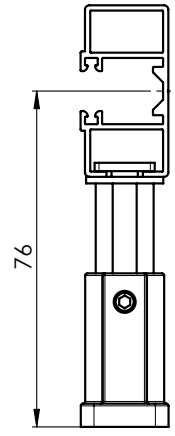

for P 016/1

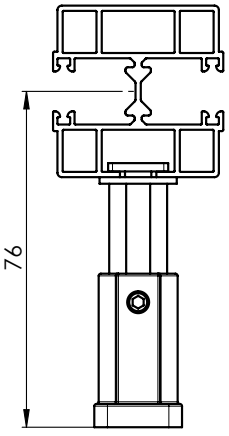

for P 016/2

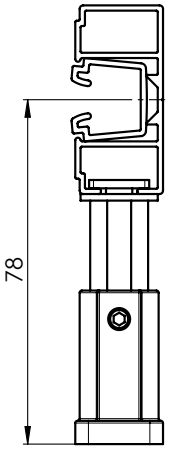

for P 016/3

Guide rail holder P 021/6 (2-00583-PU11)

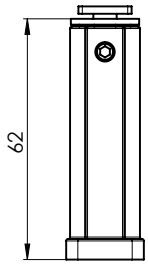

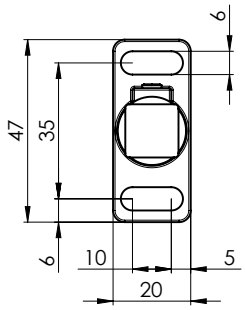

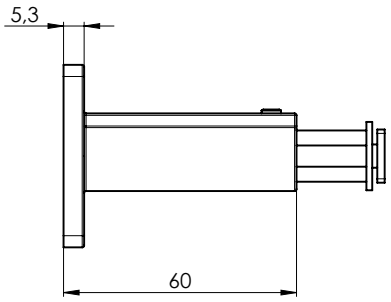

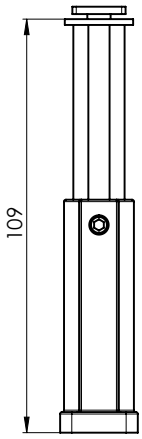

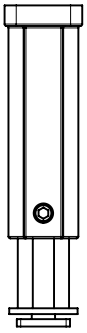

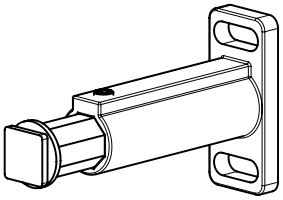

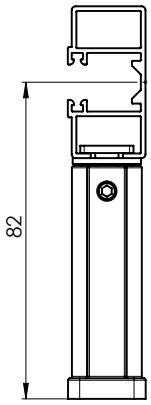

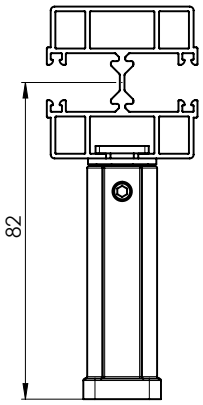

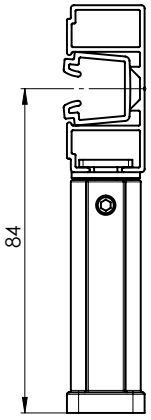

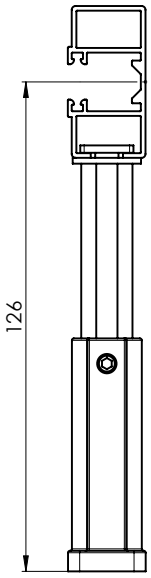

for P 016/1

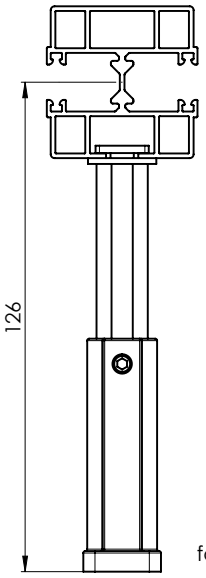

for P 016/2

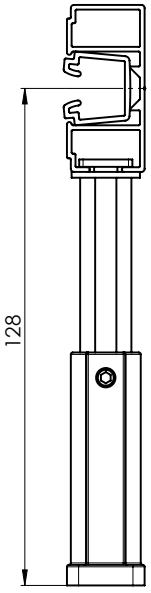

for P 016/3

Overview of guide rail holders for the self-supporting systems

item name	trade name	drawing number
Guide rail holder STS – 80 mm, anodised	P 021/17 PU 52	2-01714-PU52
Guide rail holder STS – 8 5mm, anodised	P 021/18 PU 52	2-01715-PU52
Guide rail holder STS – 90 mm, anodised	P 021/19 PU 52	2-01716-PU52
Guide rail holder STS – 95 mm, anodised	P 021/20 PU 52	2-01717-PU52
Guide rail holder STS – 100 mm, anodised	P 021/21 PU 52	2-01718-PU52
Guide rail holder STS – 105 mm, anodised	P 021/22 PU 52	2-01719-PU52
Guide rail holder STS – 110 mm, anodised	P 021/23 PU 52	2-01720-PU52
Guide rail holder STS – 115 mm, anodised	P 021/24 PU 52	2-01721-PU52
Guide rail holder STS – 120 mm, anodised	P 021/25 PU 52	2-01722-PU52
Guide rail holder STS – 125 mm, anodised	P 021/26 PU 52	2-01723-PU52
Guide rail holder STS – 130 mm, anodised	P 021/27 PU 52	2-01724-PU52
Guide rail holder STS – 135 mm, anodised	P 021/28 PU 52	2-01725-PU52
Guide rail holder STS – 140 mm, anodised	P 021/29 PU 52	2-01726-PU52
Guide rail holder STS – 145 mm, anodised	P 021/30 PU 52	2-01727-PU52
Guide rail holder STS – 150 mm, anodised	P 021/31 PU 52	2-01728-PU52
Guide rail holder STS – 155 mm, anodised	P 021/32 PU 52	2-01729-PU52
Guide rail holder STS – 160 mm, anodised	P 021/33 PU 52	2-01730-PU52
Guide rail holder STS – 165 mm, anodised	P 021/34 PU 52	2-01731-PU52
Guide rail holder STS – 170 mm, anodised	P 021/35 PU 52	2-01732-PU52
Guide rail holder STS – 175 mm, anodised	P 021/36 PU 52	2-01733-PU52
Guide rail holder STS – 180 mm, anodised	P 021/37 PU 52	2-01734-PU52
Guide rail holder STS – 185 mm, anodised	P 021/38 PU 52	2-01735-PU52
Guide rail holder STS – 190 mm, anodised	P 021/39 PU 52	2-01736-PU52
Guide rail holder STS – 195 mm, anodised	P 021/40 PU 52	2-01737-PU52
Guide rail holder STS – 200 mm, anodised	P 021/41 PU 52	2-01738-PU52
Guide rail holder STS – 205 mm, anodised	P 021/42 PU 52	2-01739-PU52
Guide rail holder STS – 210 mm, anodised	P 021/43 PU 52	2-01740-PU52
Guide rail holder STS – 215 mm, anodised	P 021/44 PU 52	2-01741-PU52
Guide rail holder STS – 220 mm, anodised	P 021/45 PU 52	2-01742-PU52
Guide rail holder STS – 225 mm, anodised	P 021/46 PU 52	2-01743-PU52
Guide rail holder STS – 230 mm, anodised	P 021/47 PU 52	2-01744-PU52

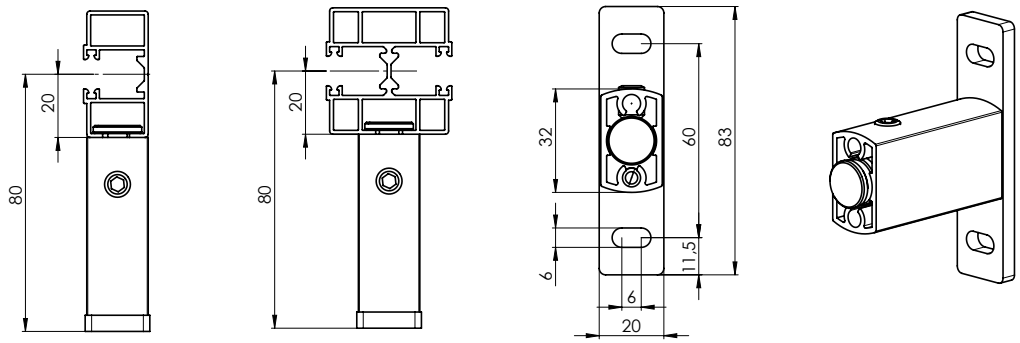

STS ALUMINIUM (2-01630-0000)

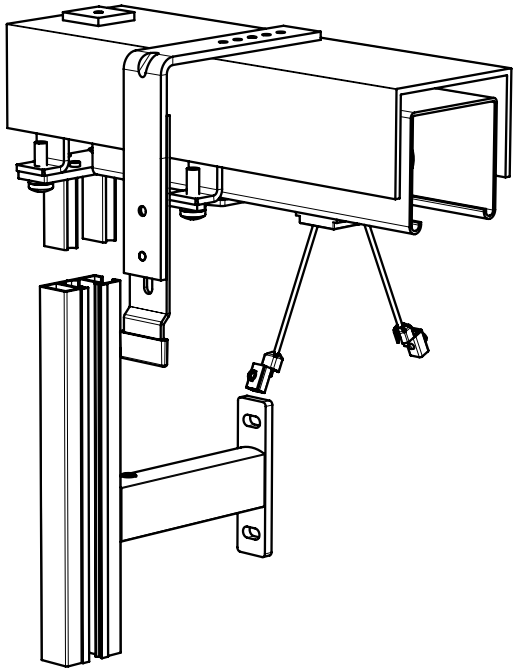

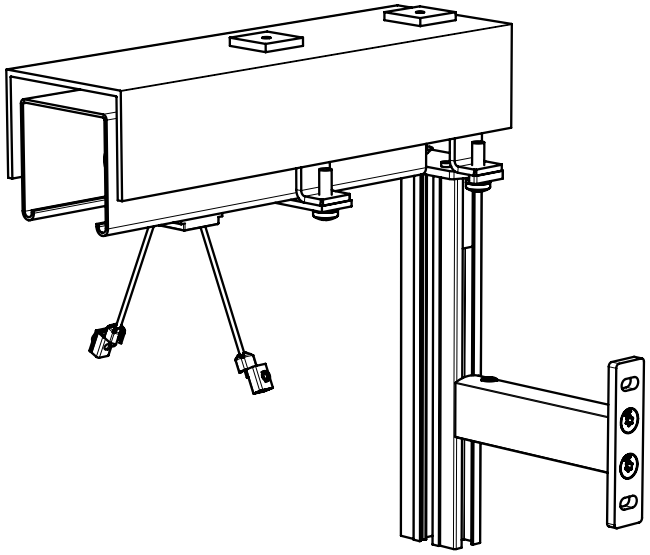

Attention: For installation with a cover sheet, it is necessary to specify the cover sheet depth for proper preparation of the cover sheet holder to the pre-assembled box.

For attaching the assembly with a cover sheet, use Al offset upper profile hanger with angle section P 002/62 - 75

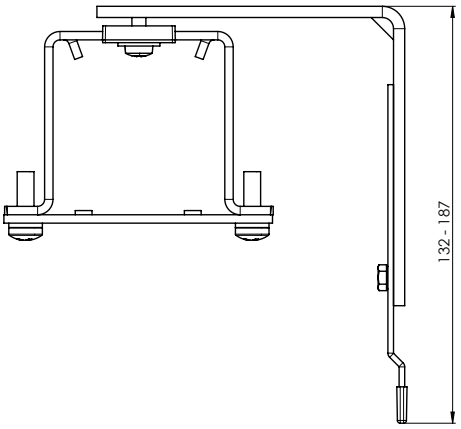

item name	trade name	drawing number
Al hanger + angle section 110x107 mm for STS	P 002/62	2-01663-0000
Al hanger + angle section 110x161 mm for STS	P 002/63	2-01664-0000
Al hanger + angle section 110x215 mm for STS	P 002/64	2-01665-0000
Al hanger + angle section 110x269 mm for STS	P 002/65	2-01666-0000
Al hanger + angle section 110x323 mm for STS	P 002/66	2-01667-0000
Al hanger + angle section 110x377 mm for STS	P 002/67	2-01668-0000
Al hanger + angle section 110x431 mm for STS	P 002/68	2-01669-0000
Al hanger + angle section 167x107 mm for STS	P 002/69	2-01670-0000
Al hanger + angle section 167x161 mm for STS	P 002/70	2-01671-0000
Al hanger + angle section 167x215 mm for STS	P 002/71	2-01672-0000
Al hanger + angle section 167x269 mm for STS	P 002/72	2-01673-0000
Al hanger + angle section 167x323 mm for STS	P 002/73	2-01674-0000
Al hanger + angle section 167x377 mm for STS	P 002/74	2-01675-0000
Al hanger + angle section 167x431 mm for STS	P 002/75	2-01676-0000

STS FIX

Basic product specification

Installation to the façade, reveal

Suitable for all types of exterior blinds with the upper profile 56×58 mm, Fe.
Max. width for self-supporting blinds: 2.4 m. For greater widths, the upper profile must be fixed; additional holder P 009/3 will be supplied automatically.
Guide rail P 018/2 FIX is supplied pre-assembled incl. holder P 010/50; guide rail P 016/3 is supplied pre-assembled incl. holder P 010/21.
Simple and fast installation.
Suitable for motorised control, possibility to couple up to 2 blinds.

Components needed:
- guide rail FIX P018/2FIX, simple self-supporting guide rail P016/3
- guide rail insert FIX (black or grey), tongs for the PVC insert
- holders for self-supporting guide rail P 021/5 and P 021/6, P 021/17 – P 021/47
- upper profile hanger P 010/50 incl. hanger P002/32, upper profile hanger P 010/51 for guide rail P016/3

- **Version with Fe upper profile 56×58 mm**

Standard blind dimensions:

	Width (mm)		Height (mm)		Guaranteed area [m²]
	min.	max.	min.	max.	max.
blind STS FIX	600	2400	500	4000	16

Attention: The upper profile hanger dimension (15 mm) will be added to the installation dimensions. For STS FIX, the upper profile will be automatically shorter by 25 mm on each side.

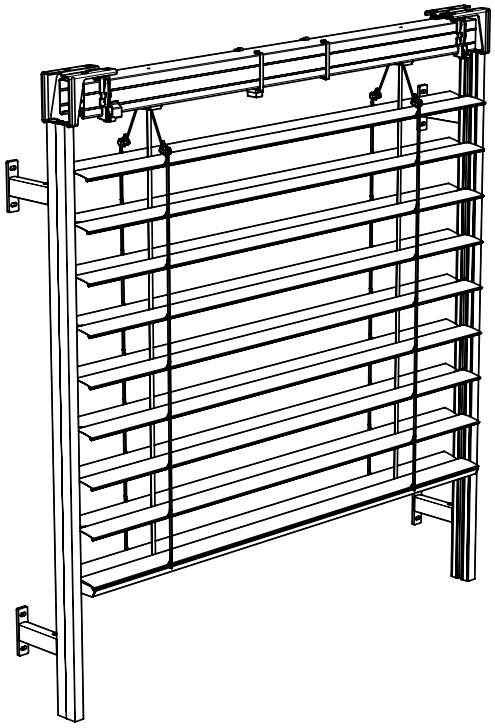

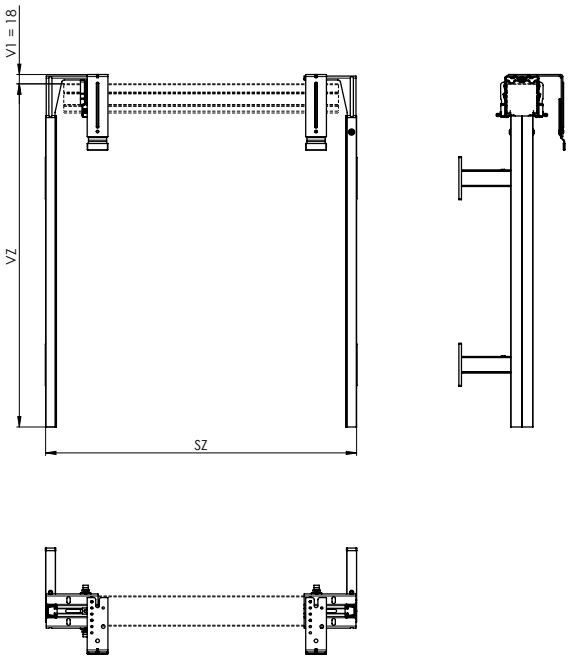

STS FIX (2-01793-0000)

Upper profile hanger P 010/50 (2-01696-0000) for guide rail P 018/2FIX

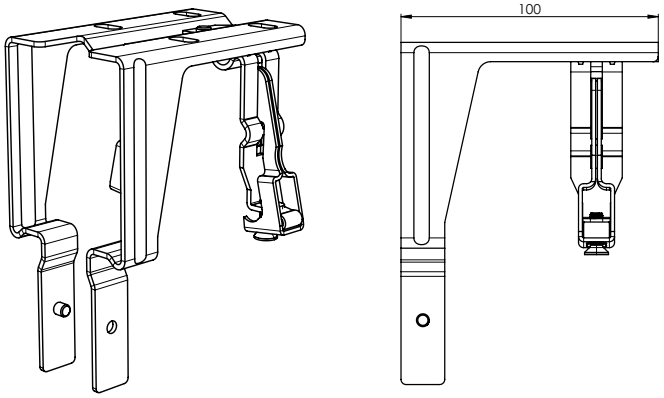

Guide rail FIX P 018/2FIX (6-015829-0000)

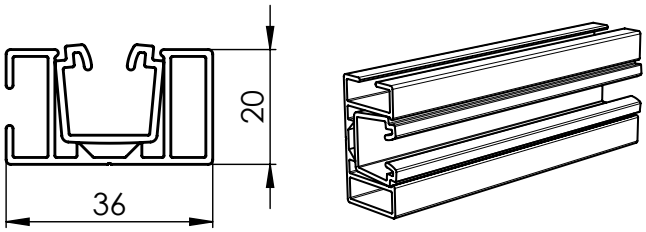

Connection plate with screws P 160 (3-04807-PU11)

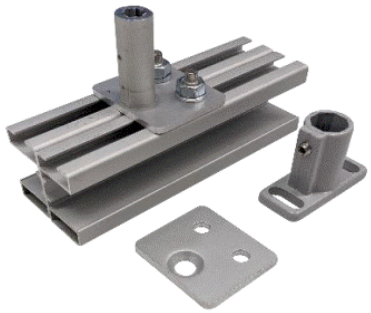

Guide rail insert FIX P 018/5FIX II
- Black (7-304355-9017)
- Grey (7-304355-7035)

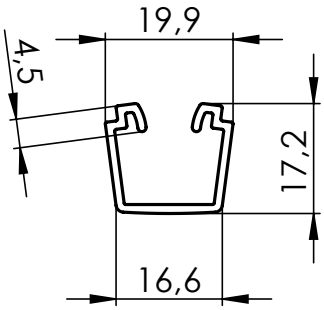

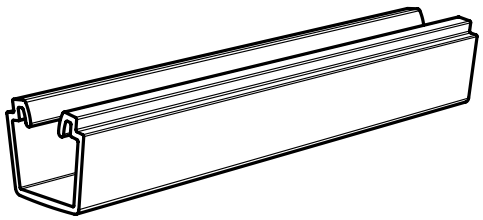

We recommend ordering tongs 3-04434-0000 for pulling up the PVC insert.

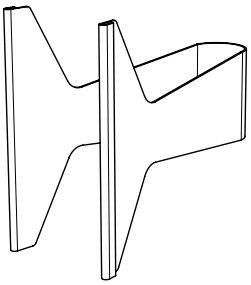

Upper profile hanger P 010/51 (2-01696-0001) for simple guide rail P016/3

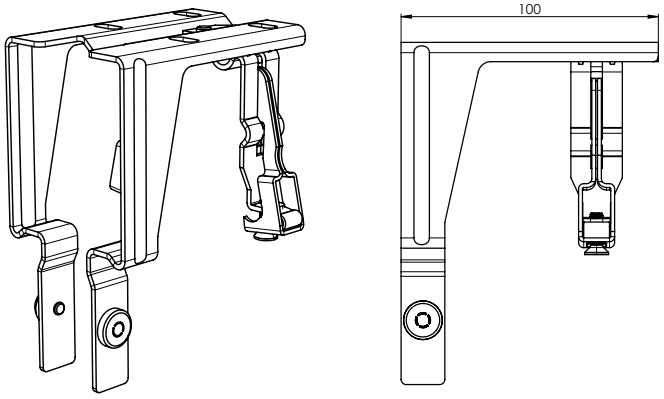

Guide rail P 016/3 (3-04380-PU11) (incl. guide rail insert P018/5)

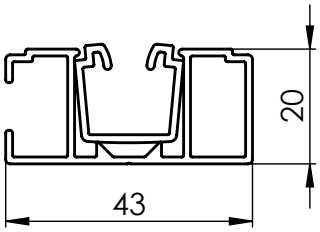

Guide rail insert FIX P 018/5FIX II
- Black (7-304355-9017)
- Grey (7-304355-7035)

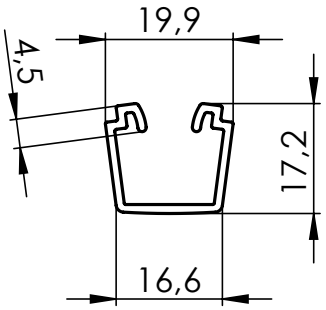

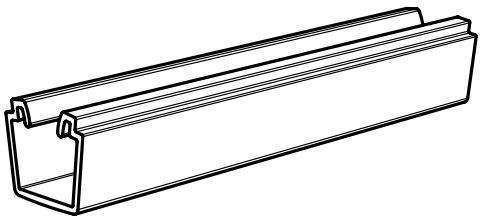

We recommend ordering tongs 3-04434-0000 for pulling up the PVC insert.

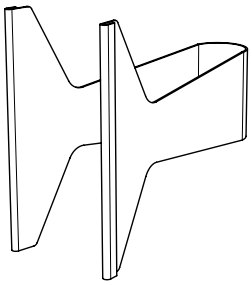

Guide rail holder P 021/5 (2-00582-PU11)

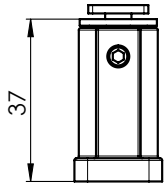

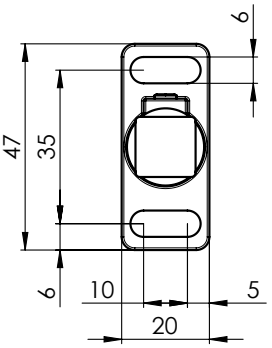

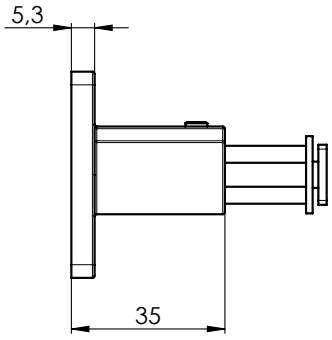

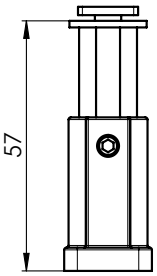

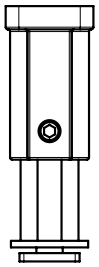

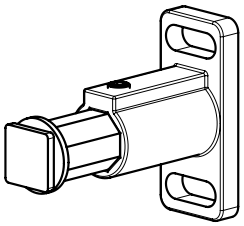

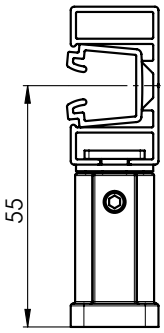

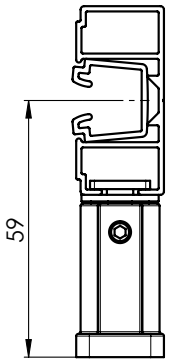

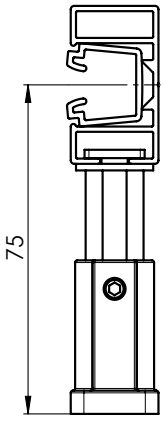

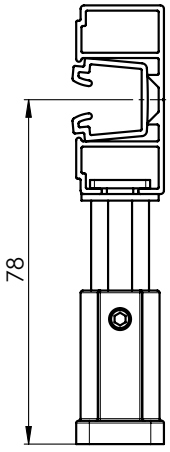

for P 018/2FIX

for P 016/3

Guide rail holder P 021/6 (2-00583-PU11)

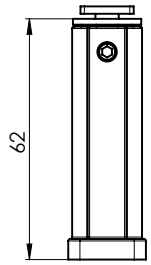

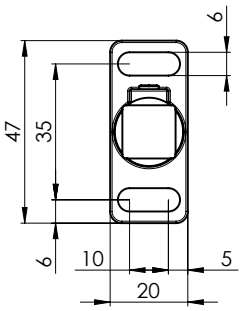

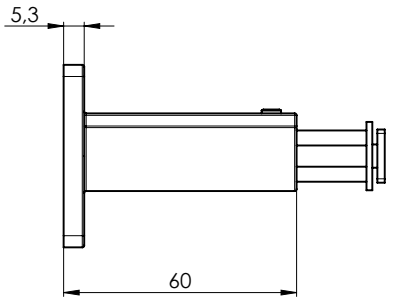

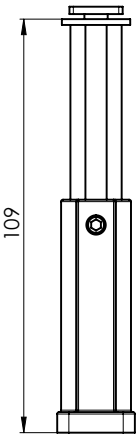

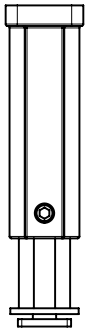

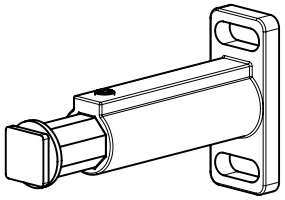

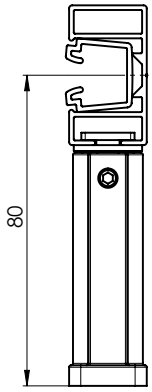

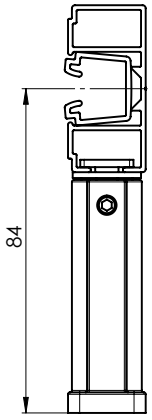

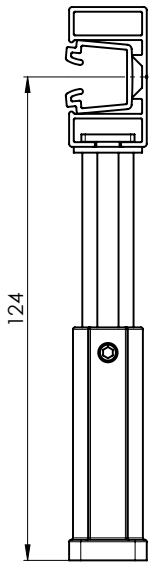

for P 018/2FIX

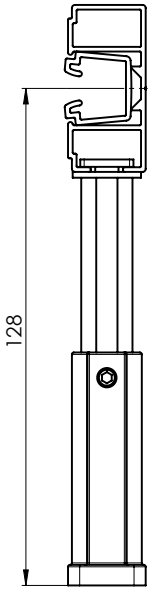

for P 016/3

Overview of guide rail holders for the self-supporting systems

item name	trade name	drawing number
Guide rail holder STS – 80 mm, anodised	P 021/17 PU 52	2-01714-PU52
Guide rail holder STS – 8 5mm, anodised	P 021/18 PU 52	2-01715-PU52
Guide rail holder STS – 90 mm, anodised	P 021/19 PU 52	2-01716-PU52
Guide rail holder STS – 95 mm, anodised	P 021/20 PU 52	2-01717-PU52
Guide rail holder STS – 100 mm, anodised	P 021/21 PU 52	2-01718-PU52
Guide rail holder STS – 105 mm, anodised	P 021/22 PU 52	2-01719-PU52
Guide rail holder STS – 110 mm, anodised	P 021/23 PU 52	2-01720-PU52
Guide rail holder STS – 115 mm, anodised	P 021/24 PU 52	2-01721-PU52
Guide rail holder STS – 120 mm, anodised	P 021/25 PU 52	2-01722-PU52
Guide rail holder STS – 125 mm, anodised	P 021/26 PU 52	2-01723-PU52
Guide rail holder STS – 130 mm, anodised	P 021/27 PU 52	2-01724-PU52
Guide rail holder STS – 135 mm, anodised	P 021/28 PU 52	2-01725-PU52
Guide rail holder STS – 140 mm, anodised	P 021/29 PU 52	2-01726-PU52
Guide rail holder STS – 145 mm, anodised	P 021/30 PU 52	2-01727-PU52
Guide rail holder STS – 150 mm, anodised	P 021/31 PU 52	2-01728-PU52
Guide rail holder STS – 155 mm, anodised	P 021/32 PU 52	2-01729-PU52
Guide rail holder STS – 160 mm, anodised	P 021/33 PU 52	2-01730-PU52
Guide rail holder STS – 165 mm, anodised	P 021/34 PU 52	2-01731-PU52
Guide rail holder STS – 170 mm, anodised	P 021/35 PU 52	2-01732-PU52
Guide rail holder STS – 175 mm, anodised	P 021/36 PU 52	2-01733-PU52
Guide rail holder STS – 180 mm, anodised	P 021/37 PU 52	2-01734-PU52
Guide rail holder STS – 185 mm, anodised	P 021/38 PU 52	2-01735-PU52
Guide rail holder STS – 190 mm, anodised	P 021/39 PU 52	2-01736-PU52
Guide rail holder STS – 195 mm, anodised	P 021/40 PU 52	2-01737-PU52
Guide rail holder STS – 200 mm, anodised	P 021/41 PU 52	2-01738-PU52
Guide rail holder STS – 205 mm, anodised	P 021/42 PU 52	2-01739-PU52
Guide rail holder STS – 210 mm, anodised	P 021/43 PU 52	2-01740-PU52
Guide rail holder STS – 215 mm, anodised	P 021/44 PU 52	2-01741-PU52
Guide rail holder STS – 220 mm, anodised	P 021/45 PU 52	2-01742-PU52
Guide rail holder STS – 225 mm, anodised	P 021/46 PU 52	2-01743-PU52
Guide rail holder STS – 230 mm, anodised	P 021/47 PU 52	2-01744-PU52

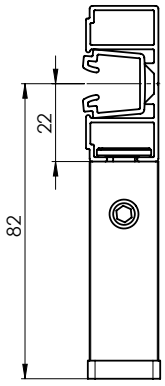

for P 018/21

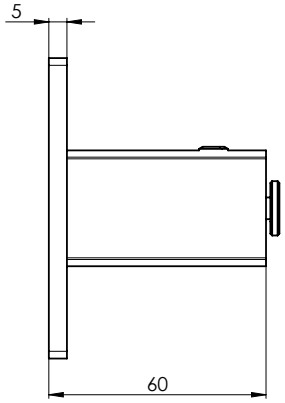

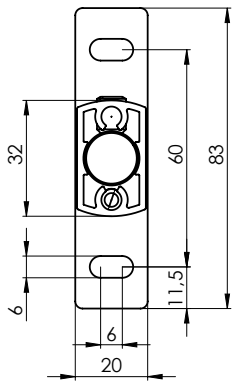

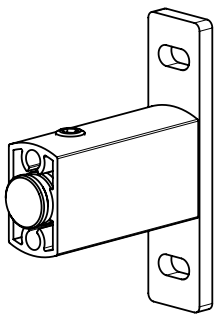

STS FIX (2-01793-0000)

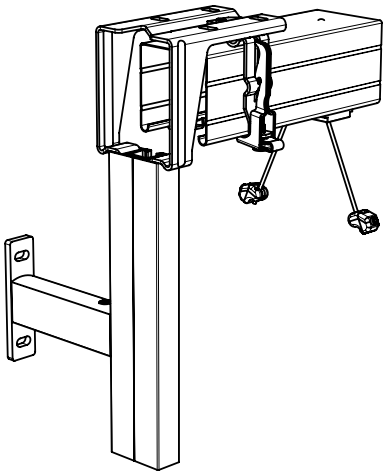

Short additional adjustable holder P 009/3 (2-01930-0000)

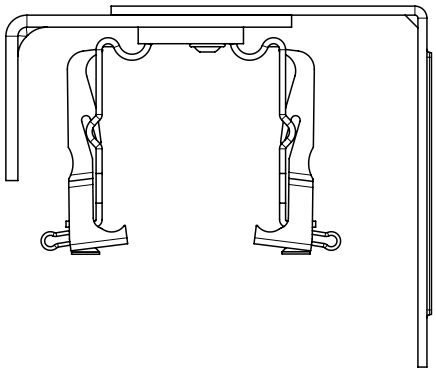

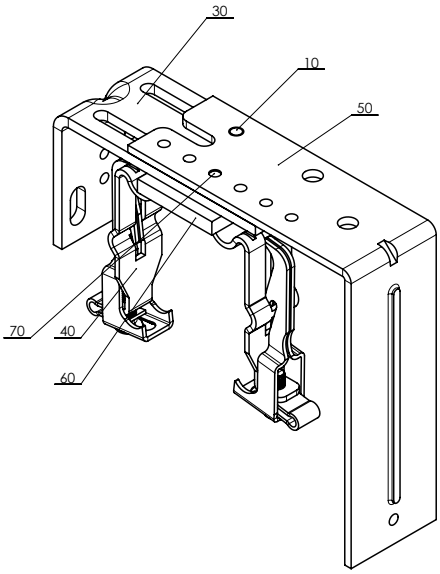

Long additional adjustable holder P 009/4 (2-01931-0000)

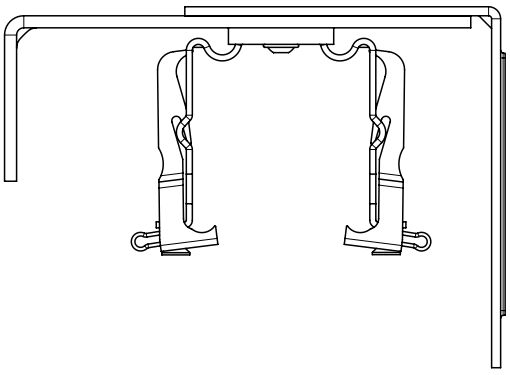

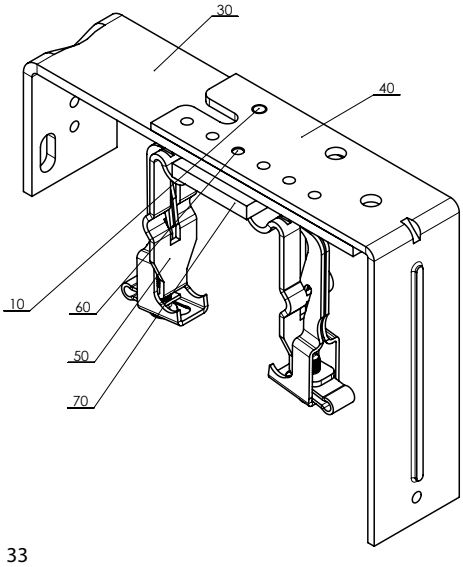

VIVA
Basic product specification

Installation to the façade, reveal

Suitable for all types of exterior blinds except Cetta 50 and Titan.
Blind with self-supporting rails and the possibility to integrate an insect screen.
The blind's upper profile incl. the slat pack is located in the ready-made box in two versions – either in under-plaster, or revealed.
The box sides include side boards to connect to the guide rails.
For the under-plaster version, the box may be fitted on the inside with insulation made of hardened polystyrene, Styrodur, or Aluthermo.

Suitable for motorised control.

Components needed:
- box, standard box height: 190 mm, 220 mm, 260 mm, 300 mm
- self-supporting guide rails (up to 42 variants)

- **Version with the Fe upper profile 56×58 mm**

Standard blind dimensions:

VIVA blind	Width (mm)		Height (mm)		Guaranteed area (m²)
	min.	max.	min.	max.	max.
without insect screen	600	4000*	500	4000	12
with insect screen	720	1800	500	2500	3

*This is the max. box width!
** For the max. blind height per slat types, see Table on p. 35

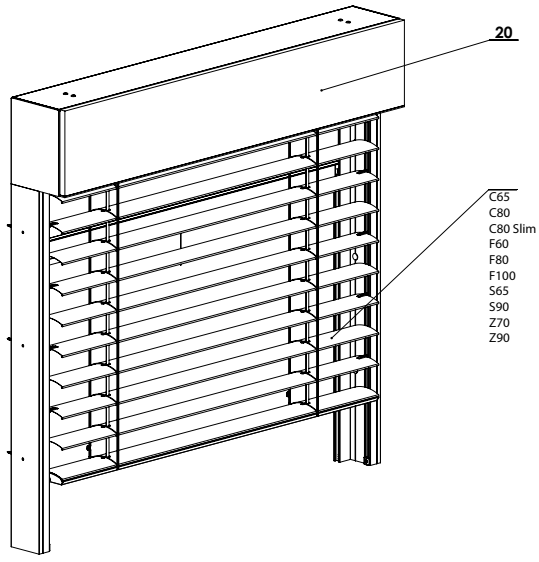

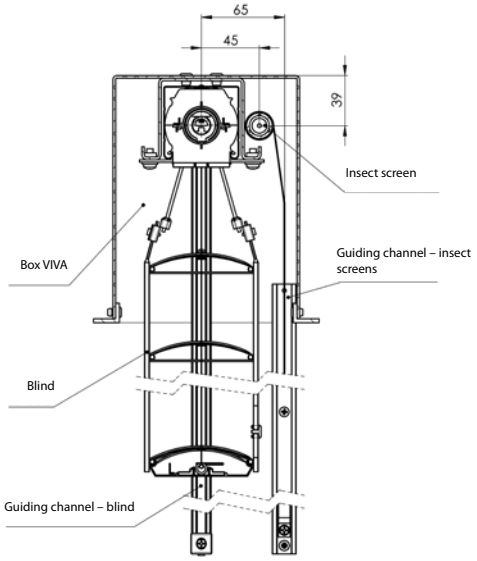

Self-supporting EB 2-01010-00004

For blind width exceeding 3500 mm:
- Al upper profile 58×60 mm
- Al brace profile with stirrup

Brace, Al (2-01394-0000)

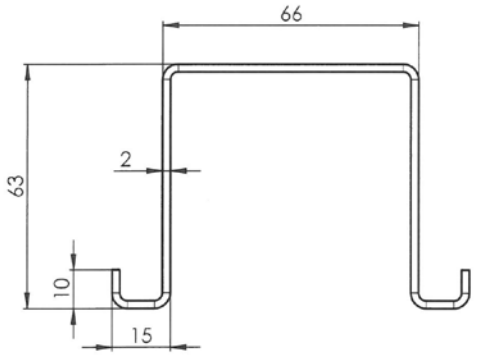

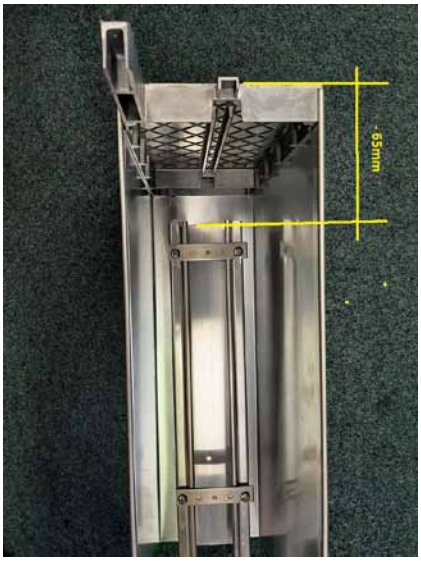





Max. blind height (mm) per slat type and box size (without insect screen)

type of blind / height of box	190	220	260	300	max. surfacea [m^2]
Cetta 65	1100	1400	2000	2400	8,8
Cetta 65 Slim	1500	2000	2600	3300	8,8
Cetta 80	1200	1600	2200	2800	10,4
Cetta 80 slim	1700	2300	3000	3700	13
Cetta 60 Flexi	2700	3600	4000	4000	16
Cetta 80 Flexi	3600	4000	4000	4000	16
Cetta 100 Flexi	4000	4000	4000	4000	16
Setta 65	1300	1700	2200	2700	10
Setta 90	1800	2400	3200	4000	13
Zetta 70	1300	1700	2300	2900	11
Zetta 90	1600	2200	2900	3500	13

A brace profile will be automatically supplied for blind widths exceeding 3500 mm.

The max. height of the VIVA self-supporting blind with an insect screen is 2500 mm.

VIVA self-supporting blind

Box for self-supporting EB – combined guide rails (2-01016-XXXX)

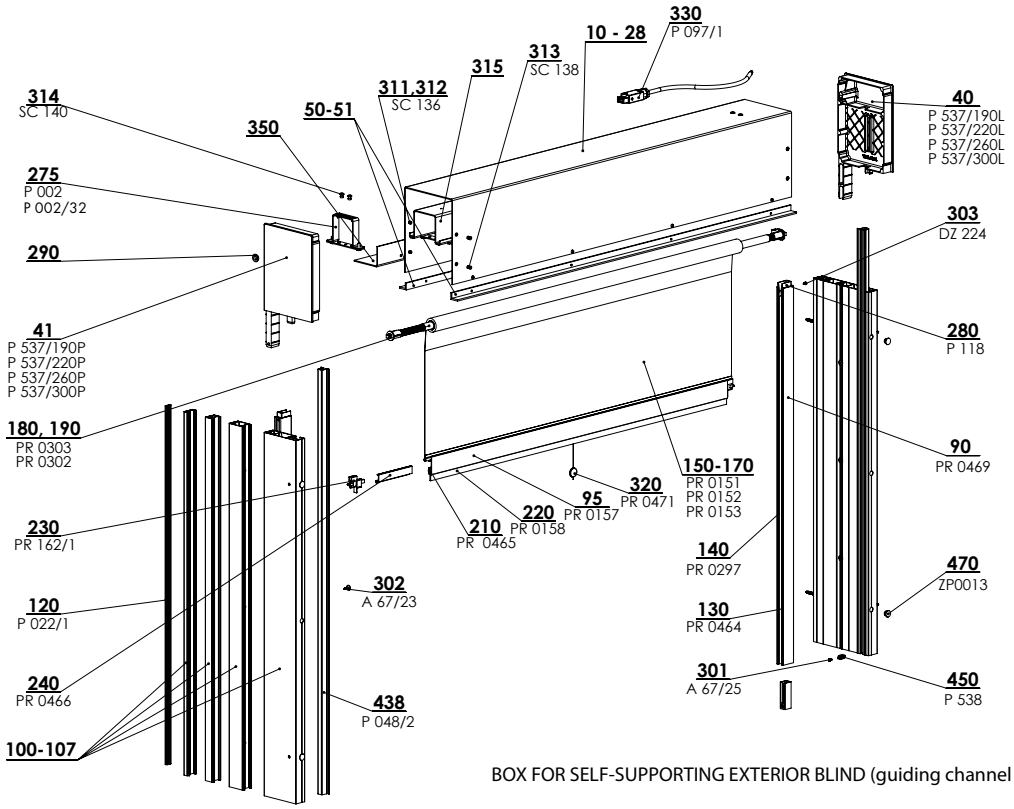

BOX FOR SELF-SUPPORTING EXTERIOR BLIND (guiding channel RS75) 2-01016-XXXX-D

VIVA box for multiple blinds – one box may only contain max. 2 blinds and 2 motors (2-01016-XXXX)

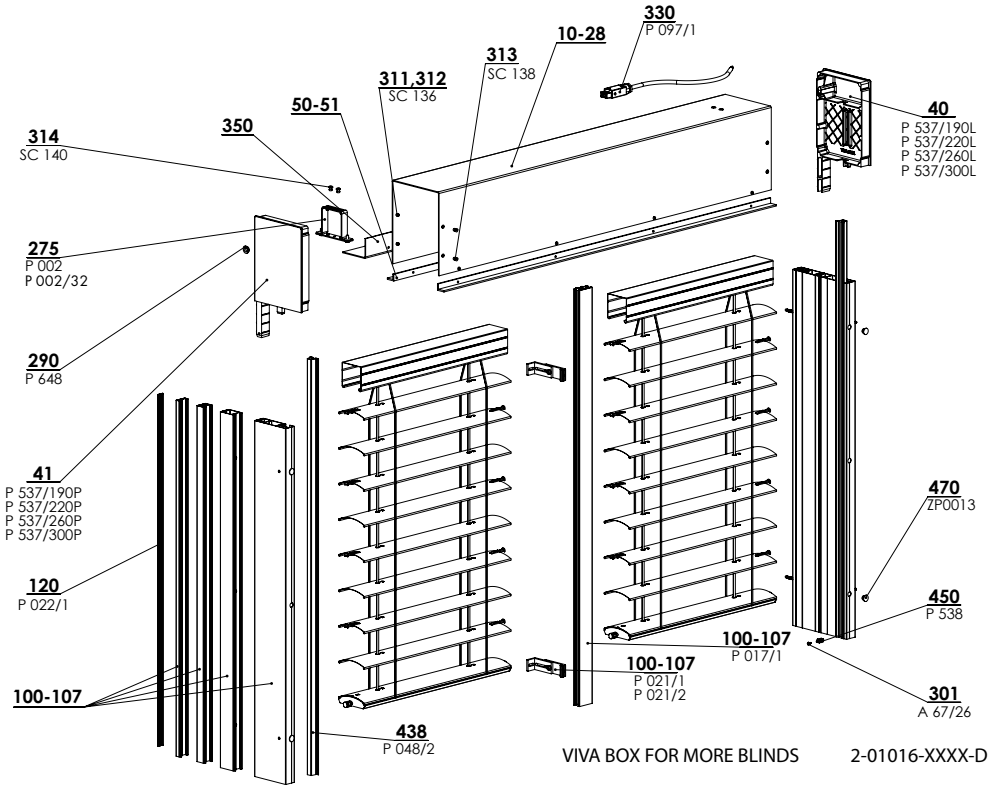

VIVA BOX FOR MORE BLINDS 2-01016-XXXX-D

Max. box width for both blinds is 4000 mm.

VIVA box cross-section

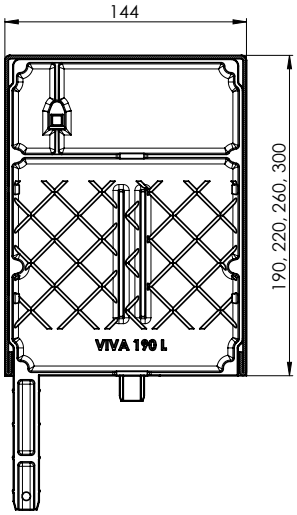

Cross-section of revealed VIVA box
190x140b
220x140b
260x140b
300x140b

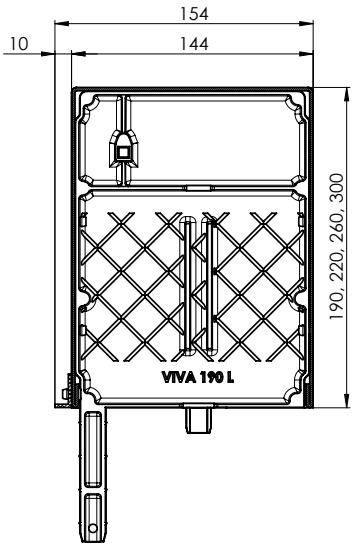

Cross-section of revealed VIVA box
+ P 020/01, P 080/01, P 081/01
190 x 140b
220 x 140b
260 x 140b
300 x 140b

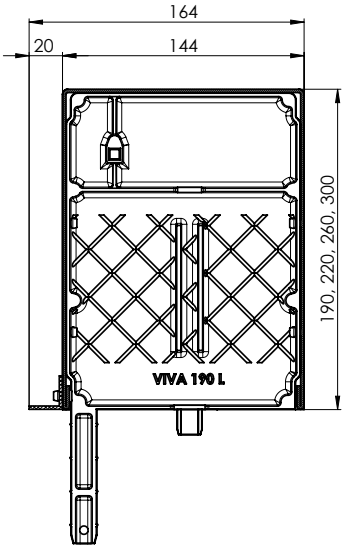

Cross-section of revealed VIVA box
+ P 020/02, P 080/02, P 081/02
190 x 140b
220 x 140b
260 x 140b
300 x 140b

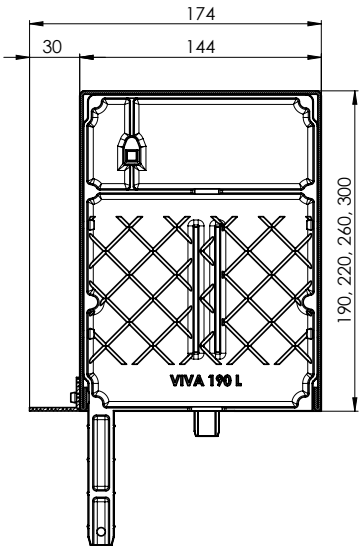

Cross-section of revealed VIVA box
+ P 020/03, P 080/03, P 081/03
190 x 140b
220 x 140b
260 x 140b
300 x 140b

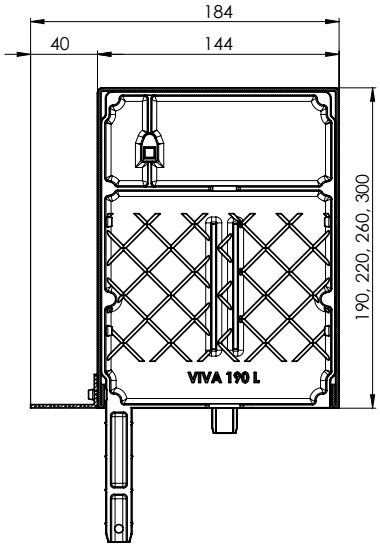

Cross-section of revealed VIVA box
+ P 020/04, P 080/04, P 081/04
190x140b
220x140b
260x140b
300x140b

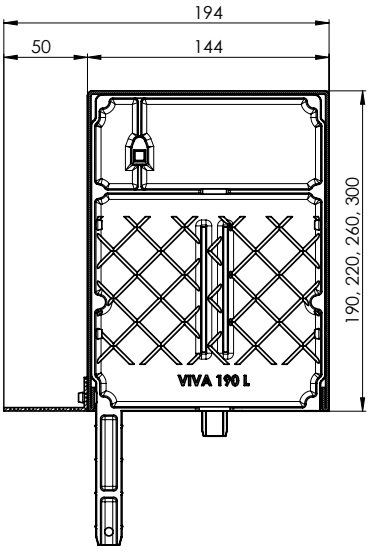

Cross-section of revealed VIVA box
+ P 020/05, P 080/05, P 081/05
190 x 140b
220 x 140b
260 x 140b
300 x 140b

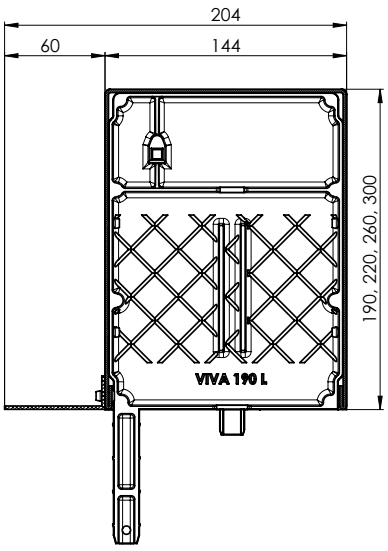

Cross-section of revealed VIVA box
+ P 020/06, P 080/06, P 081/06
190 x 140b
220 x 140b
260 x 140b
300 x 140b

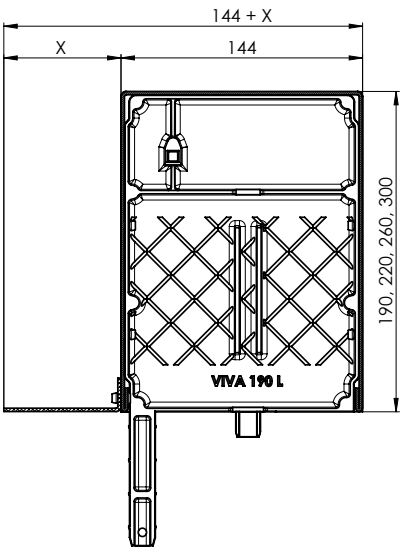

Cross-section of revealed VIVA box
+ P 020/07-20, P 080/07-20, P 081/07-20
190 x 140b
220 x 140b
260 x 140b
300 x 140b

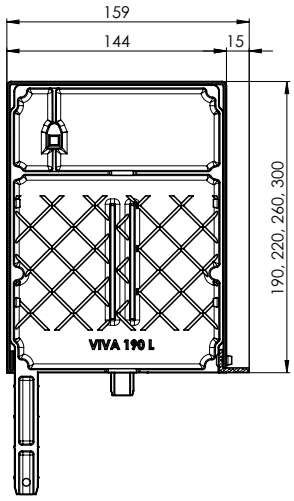

Cross-section of under-plaster VIVA box
190x150Lb
220x150Lb
260x150Lb
300x150Lb

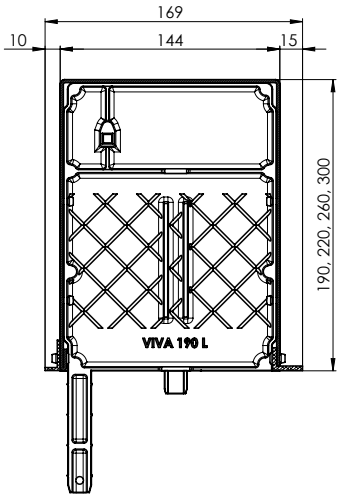

Cross-section of under-plaster VIVA box
+ P 020/01, P 080/01, P 081/01
190x150Lb
220x150Lb
260x150Lb
300x150Lb

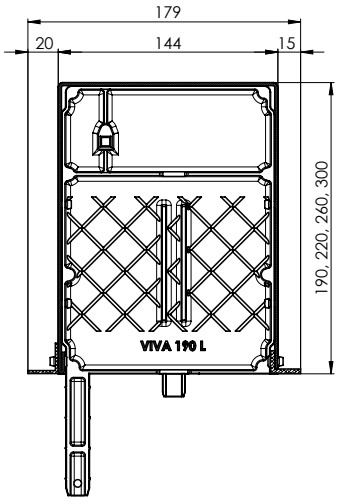

Cross-section of under-plaster VIVA box
+ P 020/02, P 080/02, P 081/02
190x150Lb
220x150Lb
260x150Lb
300x150Lb

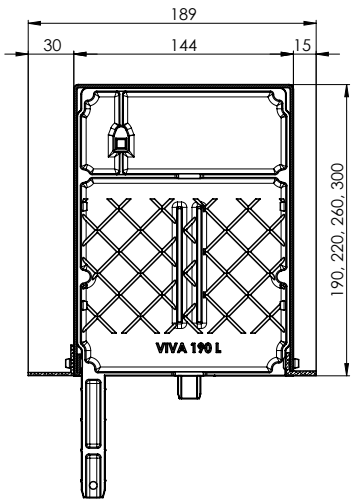

Cross-section of under-plaster VIVA box
+ P 020/03, P 080/03, P 081/03
190x150Lb
220x150Lb
260x150Lb
300x150Lb

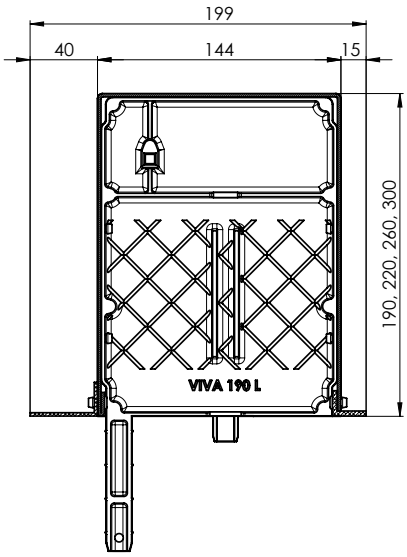

Cross-section of under-plaster VIVA box
+ P 020/04, P 080/04, P 081/04
190 x 150Lb
220 x 150Lb
260 x 150Lb
300 x 150Lb

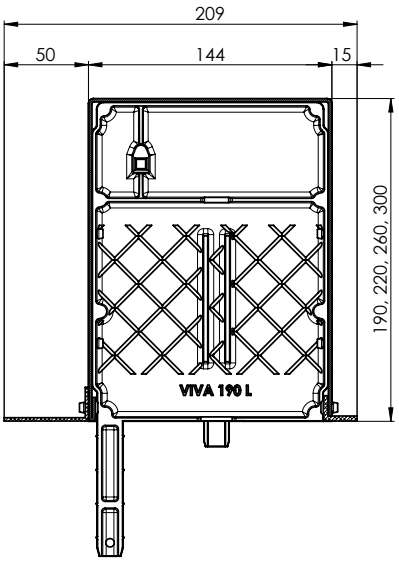

Cross-section of under-plaster VIVA box
+ P 020/05, P 080/05, P 081/05
190 x 150Lb
220 x 150Lb
260 x 150Lb
300 x 150Lb

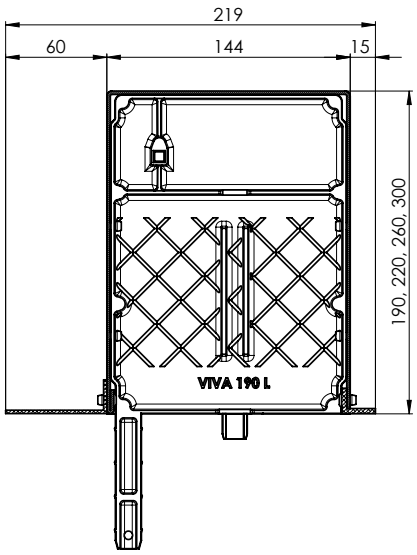

Cross-section of under-plaster VIVA box
+ P 020/06, P 080/06, P 081/06
190 x 150Lb
220 x 150Lb
260 x 150Lb
300 x 150Lb

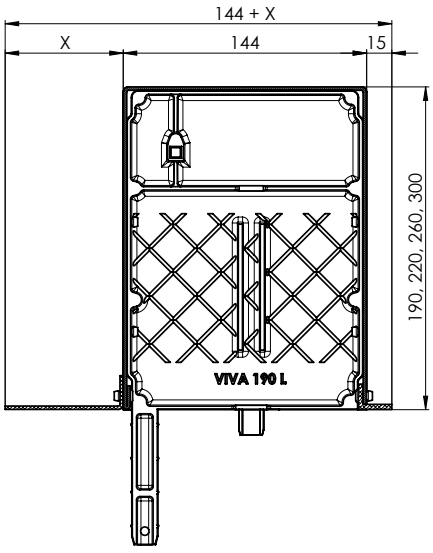

Cross-section of under-plaster VIVA box
+ P 020/07-20, P 080/07-20, P 081/07-20
190 x 150Lb
220 x 150Lb
260 x 150Lb
300 x 150Lb

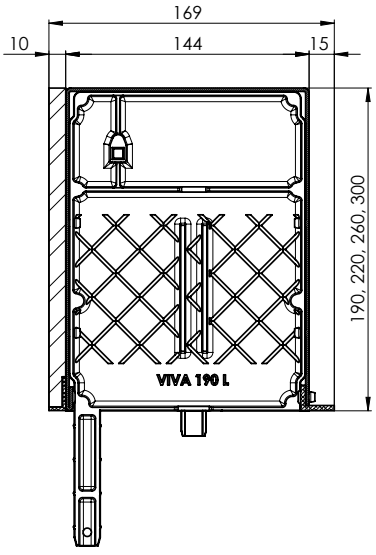

Cross-section of under-plaster VIVA box
190 x 169 x 2L x ALU10
220 x 169 x 2L x ALU10
260 x 169 x 2L x ALU10
300 x 169 x 2L x ALU10

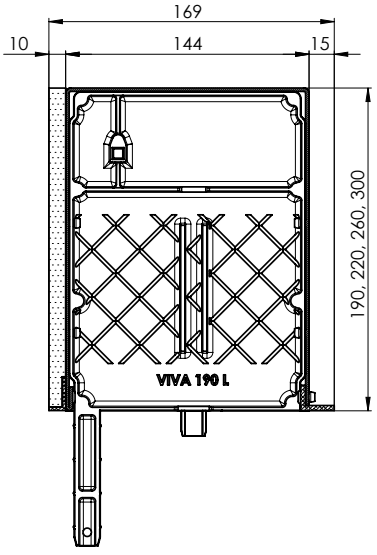

Cross-section of under-plaster VIVA box
190 x 169 x 2L x STY10
220 x 169 x 2L x STY10
260 x 169 x 2L x STY10
300 x 169 x 2L x STY10

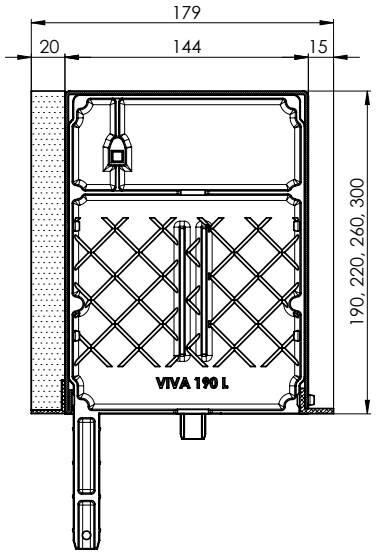

Cross-section of under-plaster VIVA box
190 x 179 x 2L x STY20
220 x 179 x 2L x STY20
260 x 179 x 2L x STY20
300 x 179 x 2L x STY20

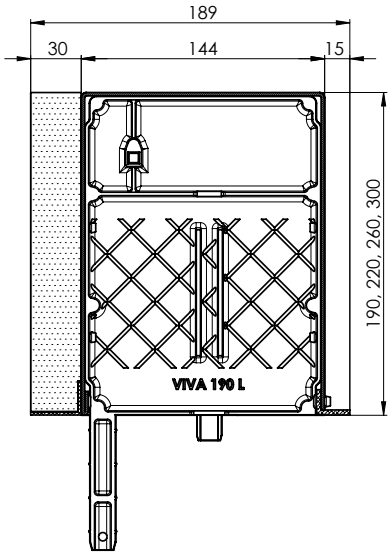

Cross-section of under-plaster VIVA box
190 x 189 x 2L x STY30
220 x 189 x 2L x STY30
260 x 189 x 2L x STY30
300 x 189 x 2L x STY30

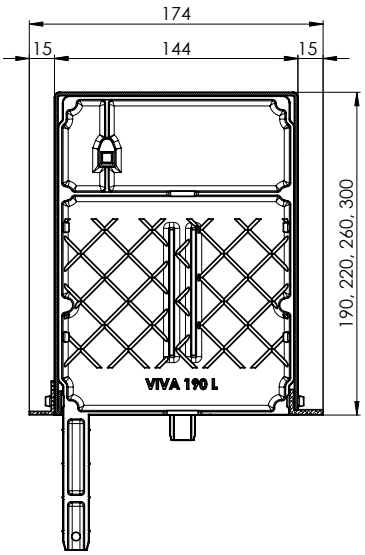

Cross-section of under-plaster VIVA box
190 x 160L2b
220 x 160L2b
260 x 160L2b
300 x 160L2b

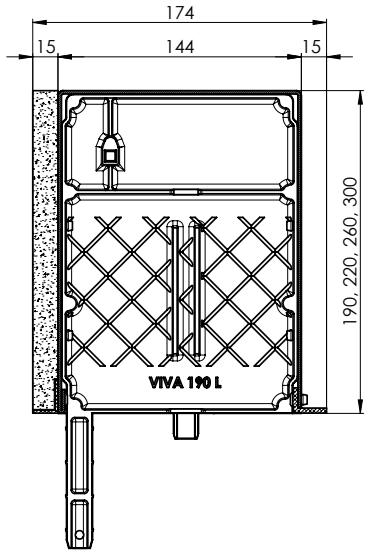

Cross-section of under-plaster VIVA box
190 x 160L2VP
220 x 160L2VP
260 x 160L2VP
300 x 160L2VP

Note:
The under-plaster box is only varnished on the inside.
For the back angle section, it is necessary to grind off 2 mm of polystyrene (angle section thickness).

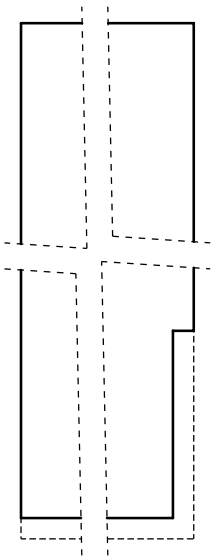

PLACEMENT OF INSULATION
ON THE ANGLE SECTION

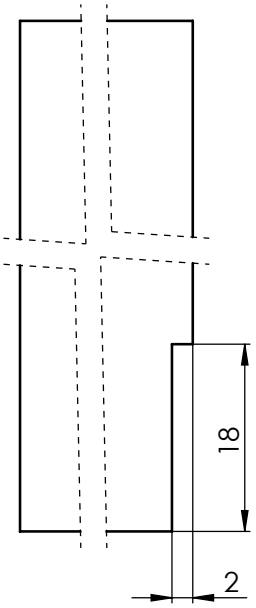

CUTOUT FOR THE ANGLE SECTION

Overview of combined guide rails P 020 with plastic insert P 048/3 (7-304444-xxxx)

size	trade name	trade name	sketch
76 mm	P 020/00	5_P 020/00vrO	
86 mm	P 020/01	5_P 020/01vrO	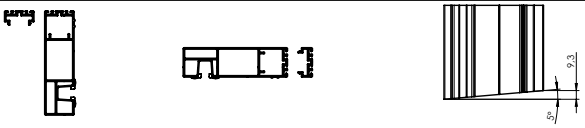
96 mm	P 020/02*	5_P 020/02vrO	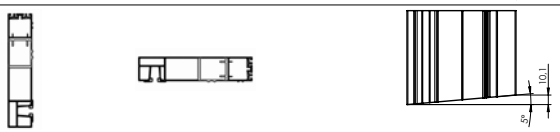
106 mm	P 020/03	5_P 020/03vrO	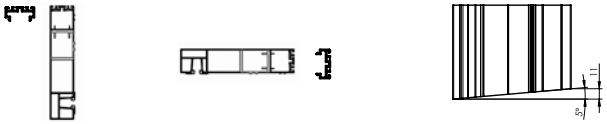
116 mm	P 020/04	5_P 020/04vrO	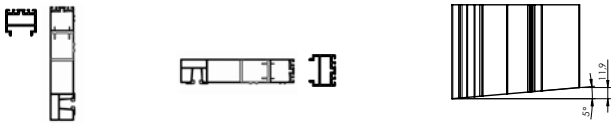
126 mm	P 020/05		
136 mm	P 020/06		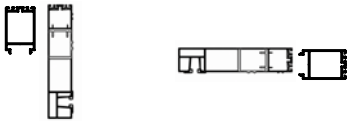
146 mm	P 020/07		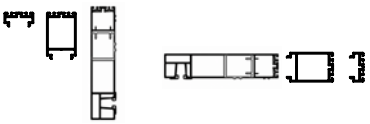
156 mm	P 020/08		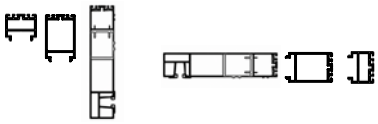
166 mm	P 020/09		
176 mm	P 020/10		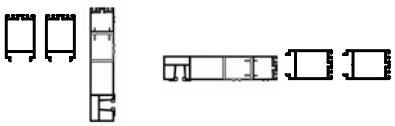
186 mm	P 020/11		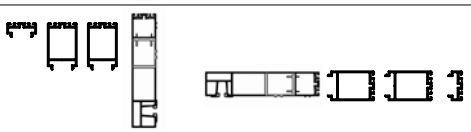
196 mm	P 020/12		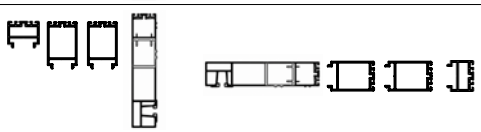
206 mm	P 020/13		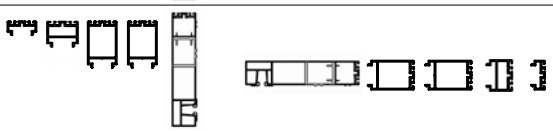

*Guide rail P 020 – plasterable – with pocket – extended 20 (7-303881-0000)

Overview of combined guide rails P 080 with plastic insert P 018/2 (7-302122-0000)

size	trade name	trade name	sketch
75 mm	P 080/00	5_P 080/00vrO	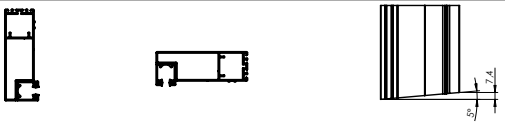
85 mm	P 080/01	5_P 080/01vrO	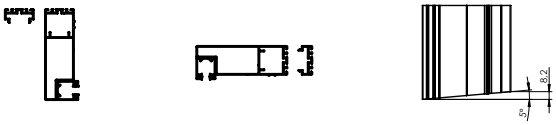
95 mm	P 080/02	5_P 080/02vrO	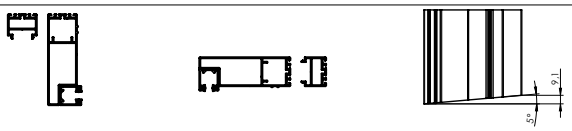
105 mm	P 080/03	5_P 080/03vrO	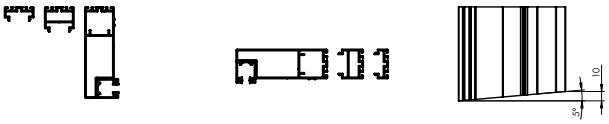
115 mm	P 080/04	5_P 080/04vrO	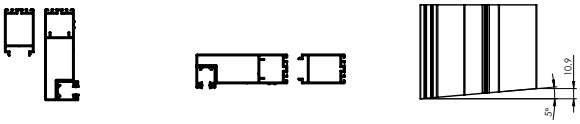
125 mm	P 080/05		
135 mm	P 080/06		
145 mm	P 080/07		
155 mm	P 080/08		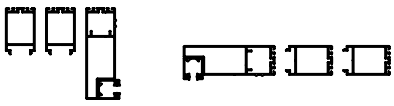
165 mm	P 080/09		
175 mm	P 080/10		
185 mm	P 080/11		
195 mm	P 080/12		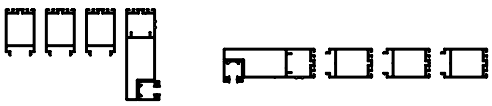
205 mm	P 080/13		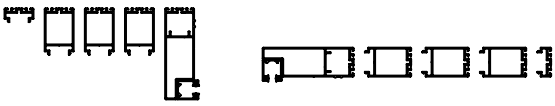

Overview of combined guide rails P 081 with plastic insert P 018/9 (7-303463-0000)

size	trade name	trade name	sketch
76 mm	P 081/00	5_P 081/00vrO	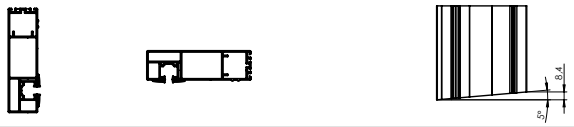
86 mm	P 081/01	5_P 081/01vrO	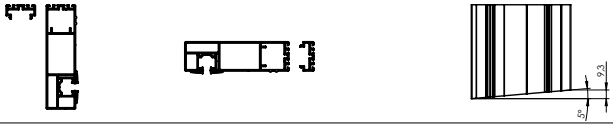
96 mm	P 081/02	5_P 081/02vrO	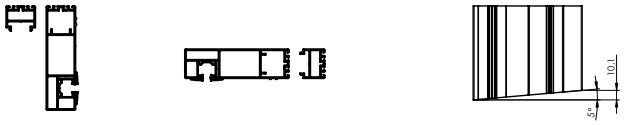
106 mm	P 081/03	5_P 081/03vrO	
116 mm	P 081/04	5_P 081/04vrO	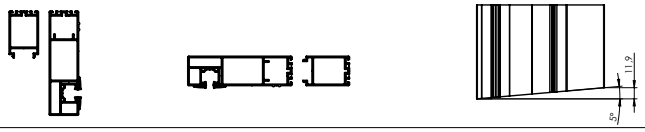
126 mm	P 081/05		
136 mm	P 081/06		
146 mm	P 081/07		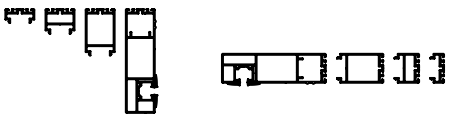
156 mm	P 081/08		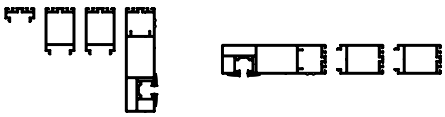
166 mm	P 081/09		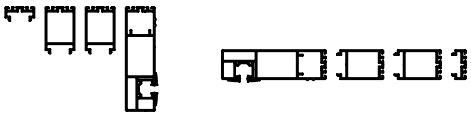
176 mm	P 081/10		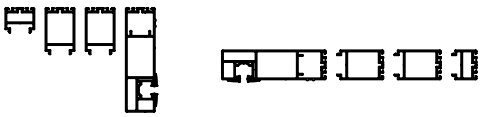
186 mm	P 081/11		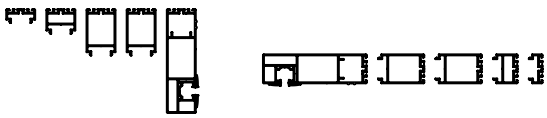
196 mm	P 081/12		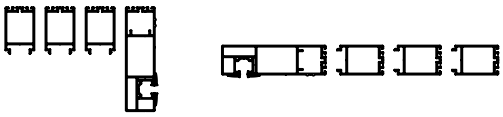
206 mm	P 081/13		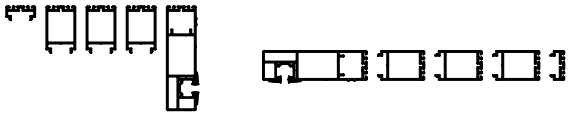

P 020/00vrO
P 020/00vrR

P 080/00vrO
P 080/00vrR

P 081/00vrO
P 081/00vrR

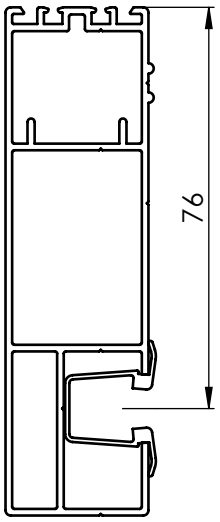

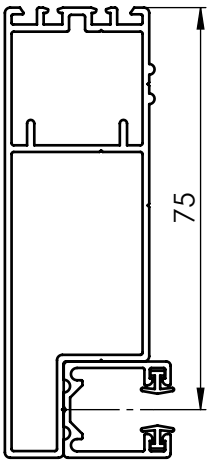

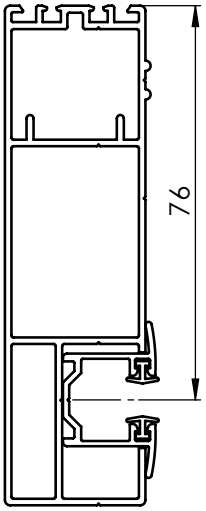

Basic profile P 020

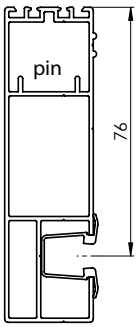

Maximum possible expansion of the basic profile P 020

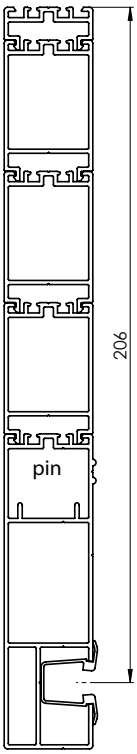

Basic profile P 080

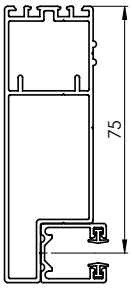

Maximum possible expansion of the basic profile P 080

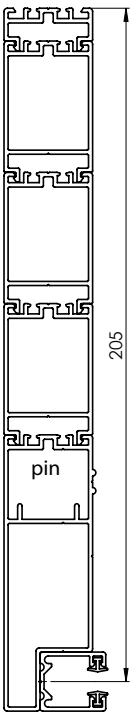

Basic profile P 081

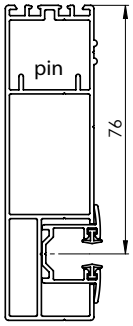

Maximum possible expansion of the basic profile P 081

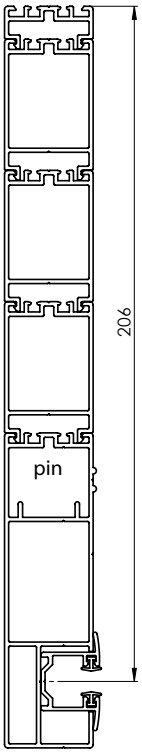

Expansion profiles for P 020, P 080, P 081

Expansion profile 10 mm
P 048/10

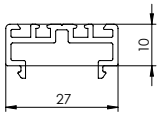

Expansion profile 20 mm
P 048/20

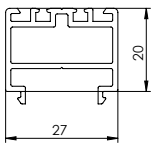

Expansion profile 40 mm
P 048/40

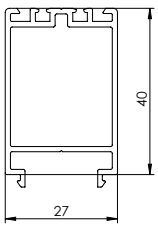

COMBINED RAILS P 020
The smallest size of guide rails P020 for the slat axis is 76 mm (i.e., this only includes installation of the under-plaster guide rail – see sketch).

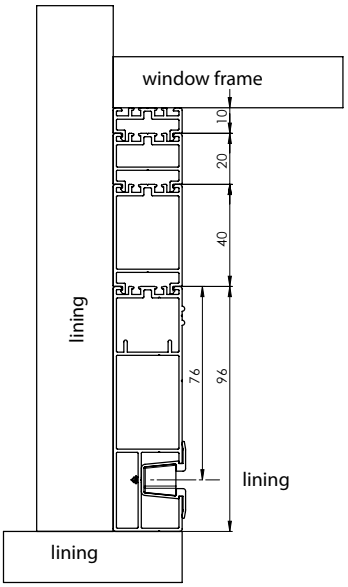

COMBINED RAILS P 080
The smallest size of guide rails P080 for the slat axis is 75 mm (i.e., this only includes installation of the under-plaster guide rail – see sketch). The rail must not be under plaster in the reveal!

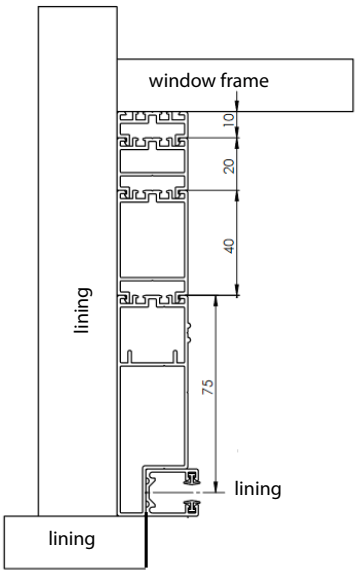

COMBINED RAILS P 081
The smallest size of guide rails P081 for the slat axis is 76 mm (i.e., this only includes installation of the under-plaster guide rail – see sketch).

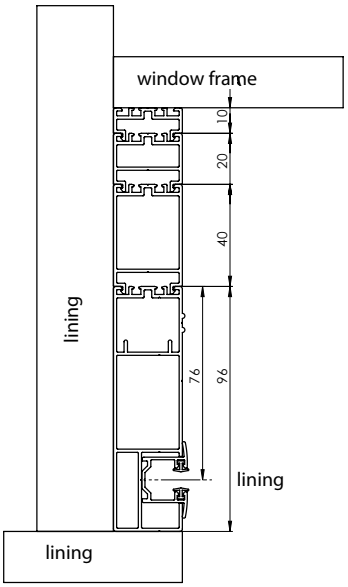

Adjusting profiles for guide rails P 020 and P 081
- VIVA adjusting profile, sectional, P 181 (3-04134-0000)
- for revealed box

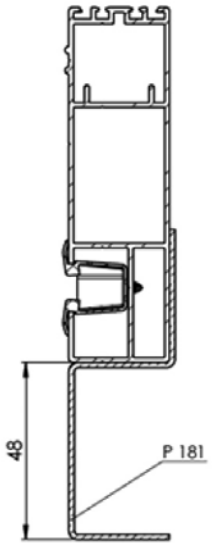

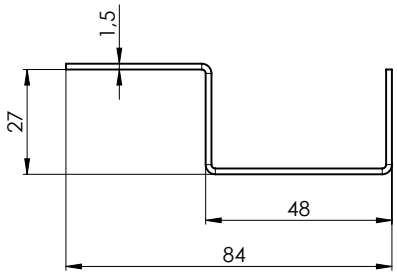

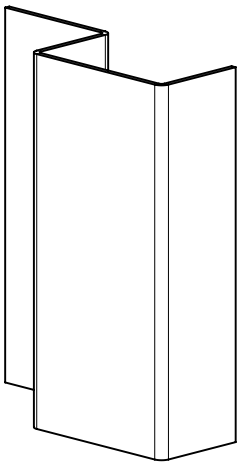

VIVA adjusting profile, sectional, P 181/00 (3-04134-0000)

- for box made ready for polystyrene

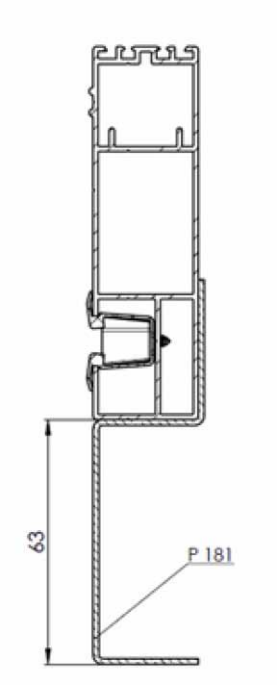

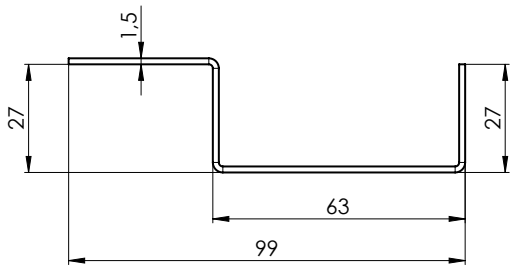

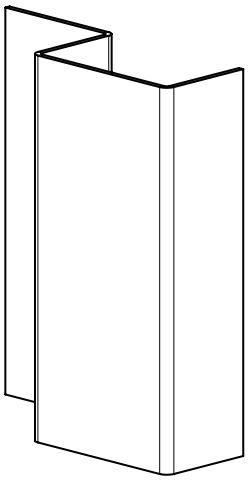

Guide rail cross-sections

Cross-section of guide rail P080

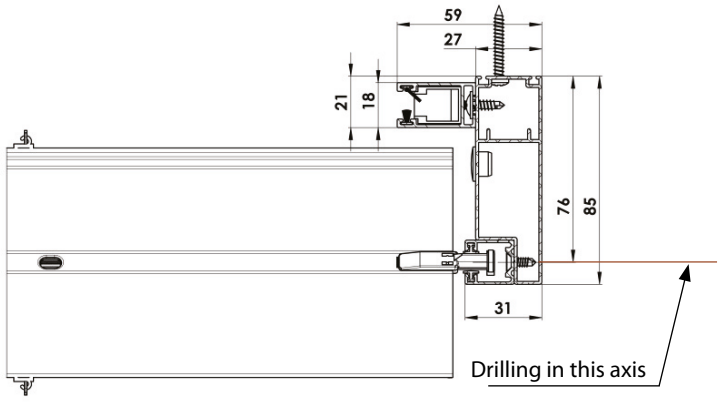

Cross-section of combined guide rail

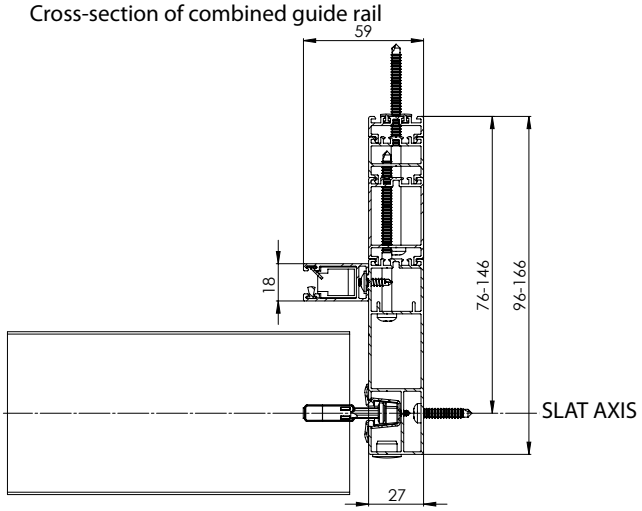

Cross-section, screen detail

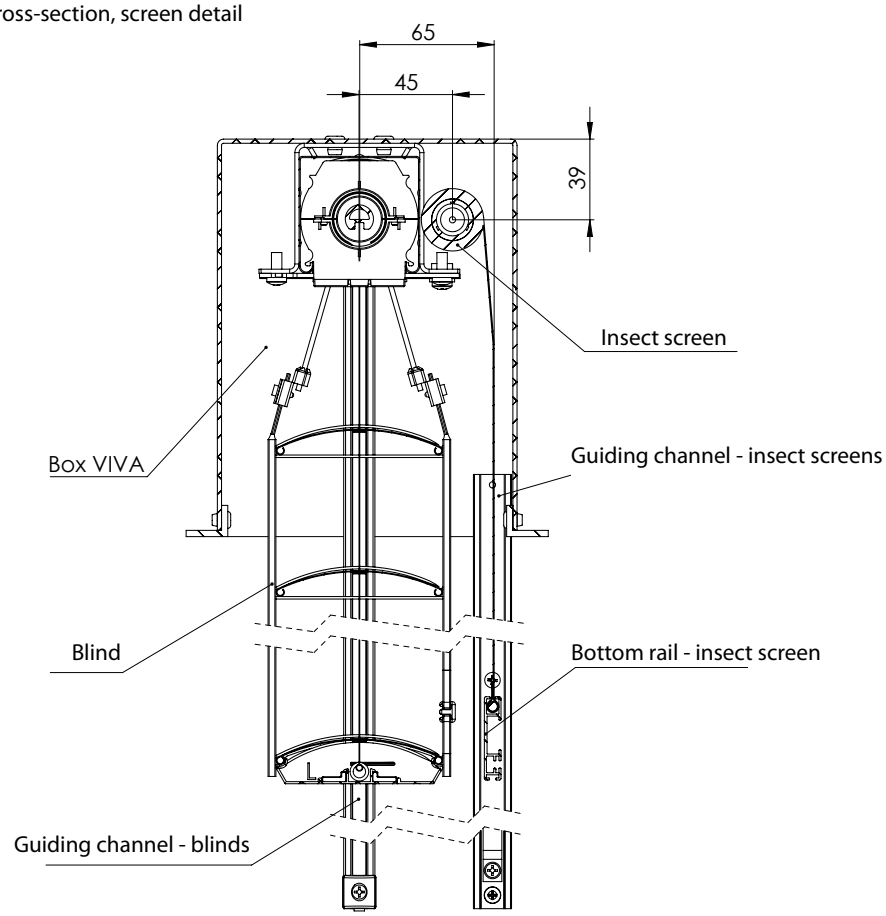

Placement of controls

Viva

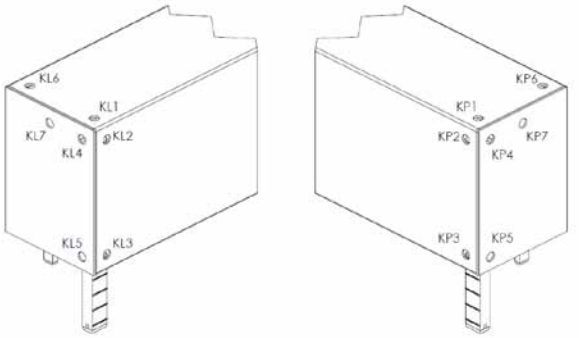

Motor – cable outlet

Viva with insect screen

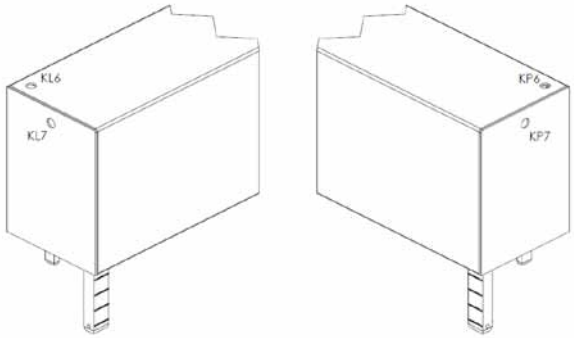

Motor – cable outlet

The cable length is 4,000 mm.

Attention: For ELERO AKKU NOTRAFF 10 Nm, ELERO NOTRAFF 4 Nm and ELERO AKKU SOLAR 4 Nm motors, the opening for the cable is not made in the box.

VIVA self-supporting blind – pre-drilling of guide rails

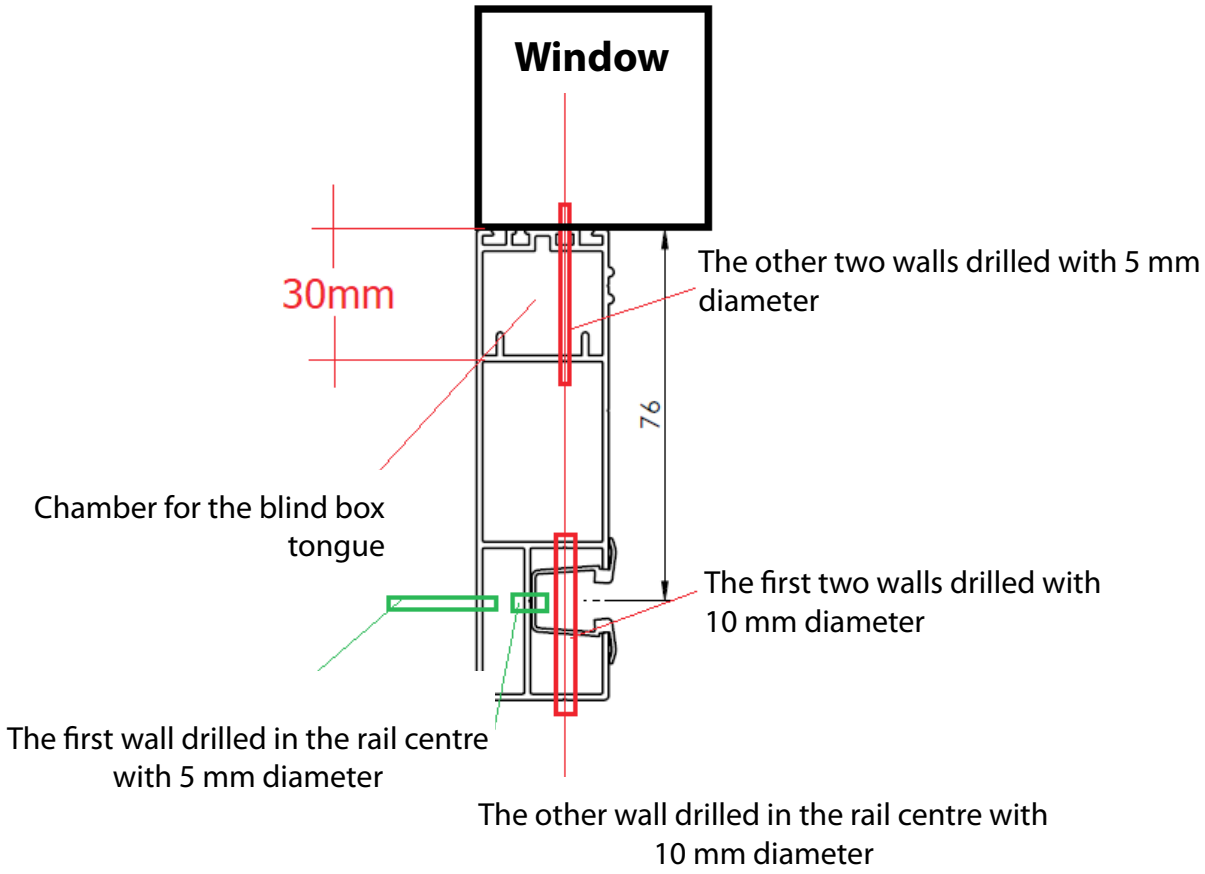

Up to 2.5 m height	
x-900 = 100; up to 500; 100	2 holes (each 100 mm from the edge)
901 – 1200 = 100; 2× up to 500; 100	3 holes (e.g., height 750 mm = 1st hole 100 mm from the edge, 2nd hole 375 mm from the edge, 3rd hole 650 mm from the edge)
1201 – 1700 = 100; 3× up to 500; 100	4 holes (e.g., height 1500 mm = 1st hole 100 mm from the edge, 2nd hole 533 mm from the edge, 3rd hole 966 mm from the edge, 4th hole 1400 mm from the edge)
1701 – 2200 = 100; 4× up to 500; 100	5 holes (e.g., height 1900 mm = 1st hole 100 mm from the edge, 2nd hole 525 mm from the edge, 3rd hole 950 mm from the edge, 4th hole 1375mm from the edge, 5th hole 1800 mm from the edge)
2200 – 2500 = 100; 4×500 - 575; 100 –accept the larger size	5 holes (e.g., height 2400 mm = 1st hole 100 mm from the edge, 2nd hole 650 mm from the edge, 3rd hole 1200 mm from the edge, 4th hole 1750 mm from the edge, 5th hole 2300 mm from the edge)

BRAVO
Basic product specification

Installation to the façade, reveal

Suitable for all types of exterior blinds with the upper profile 56×58 mm, Fe.
Blind with self-supporting rails and the possibility to integrate an insect screen.
The blind's upper profile incl. the slat pack is located in the ready-made box in a rounded version.
The box sides include side boards to connect to the guide rails.
The standard version is always with an 8 mm textile strip.
Only with vertical lower rail.

Suitable for motorised control, the motor is always located in the centre.

Components needed:
- box, standard box height: 210 mm
- self-supporting guide rails

- **version with the Fe upper profile 56×58 mm**

Standard blind dimensions:

BRAVO blind	Width (mm)		Height (mm)		Guaranteed area (m²)
	min.	max.	min.	max.	max.
without insect screen	600	3500	500	4000	10,5
with insect screen	720	1800	500	2500	3

By using this version, you will save 40 mm of the box height (cover sheet height) compared to the standard version.

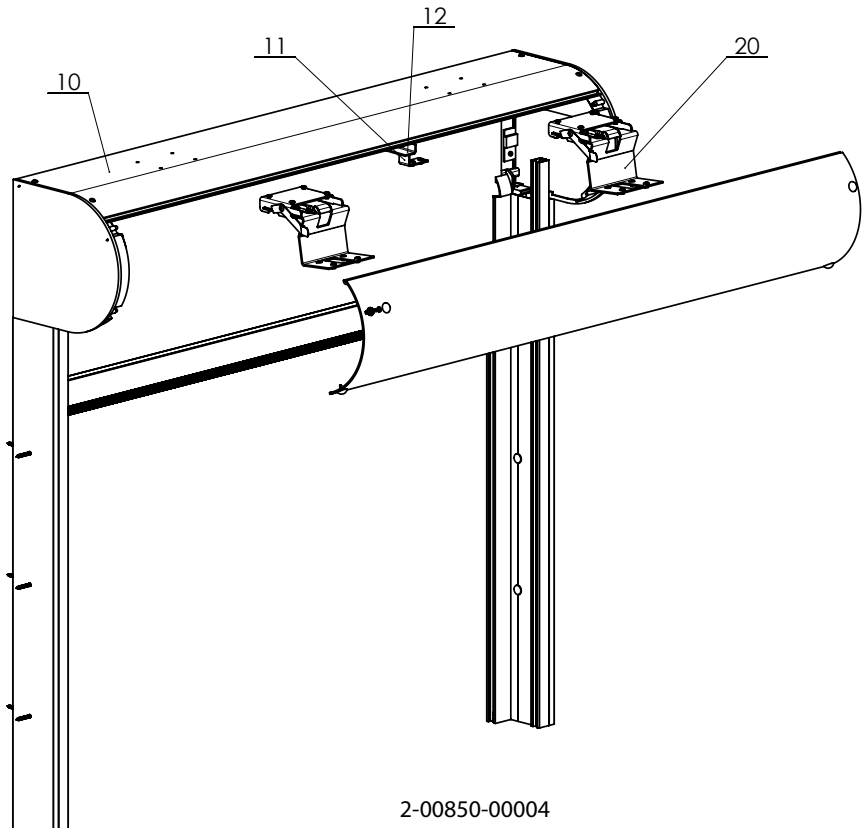

2-00850-00004

Max. blind height for 210 mm box

Blind type	Blind height in mm
Cetta 60 Flexi	1900
Cetta 65	1900
Cetta 80	2200
Cetta 80 Flexi	3000
Cetta 80 Slim	2600
Cetta 100 Flexi	3000
Setta 65	1900
Setta 90	2700
Zetta 70	2100
Zetta 90	2500

Box assembly

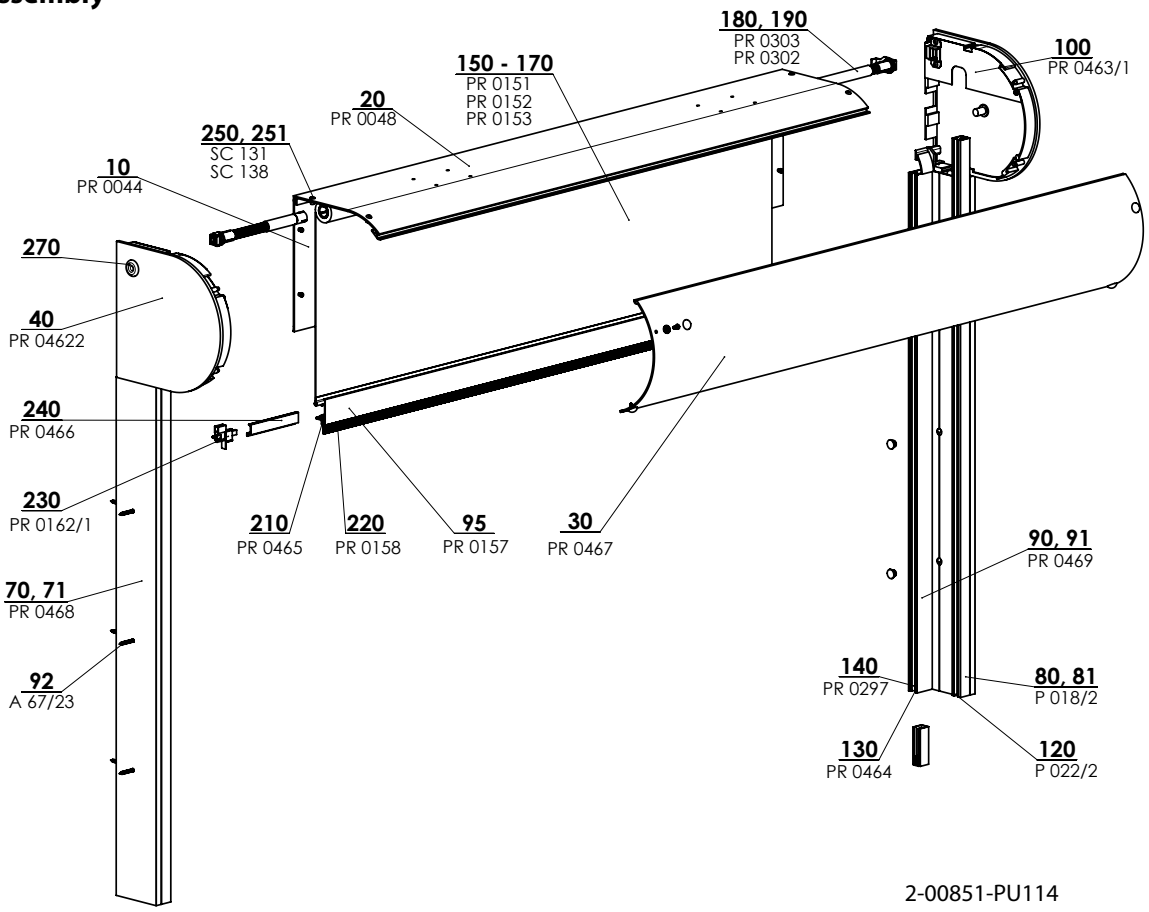

Box cross-section

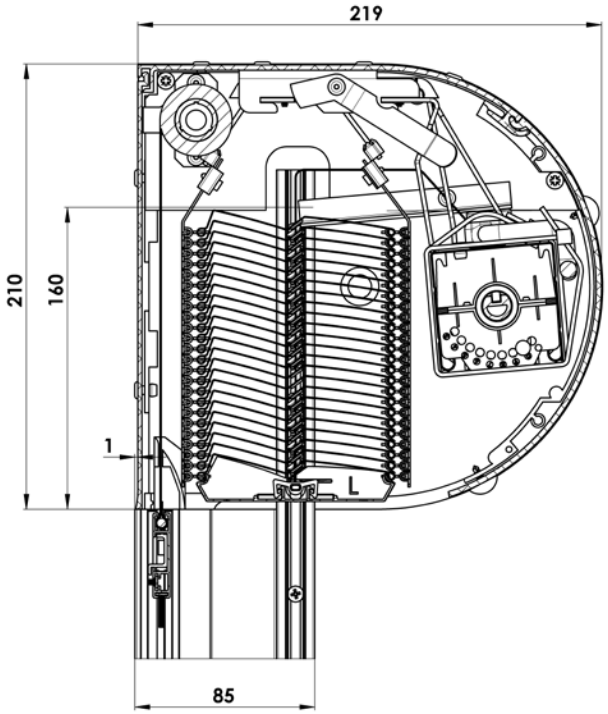

Upper profile holder

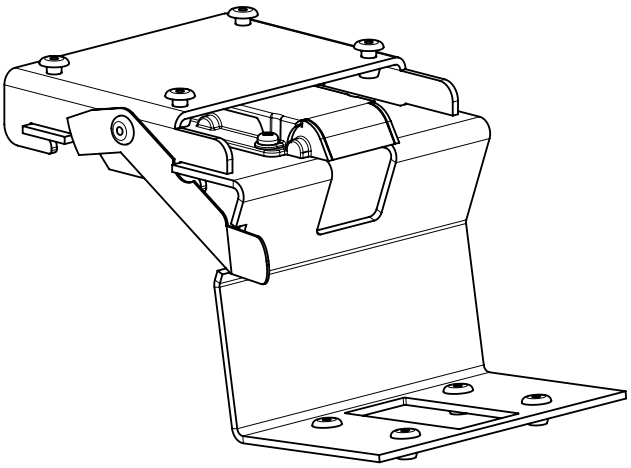

Cross-section of guide rail P 080

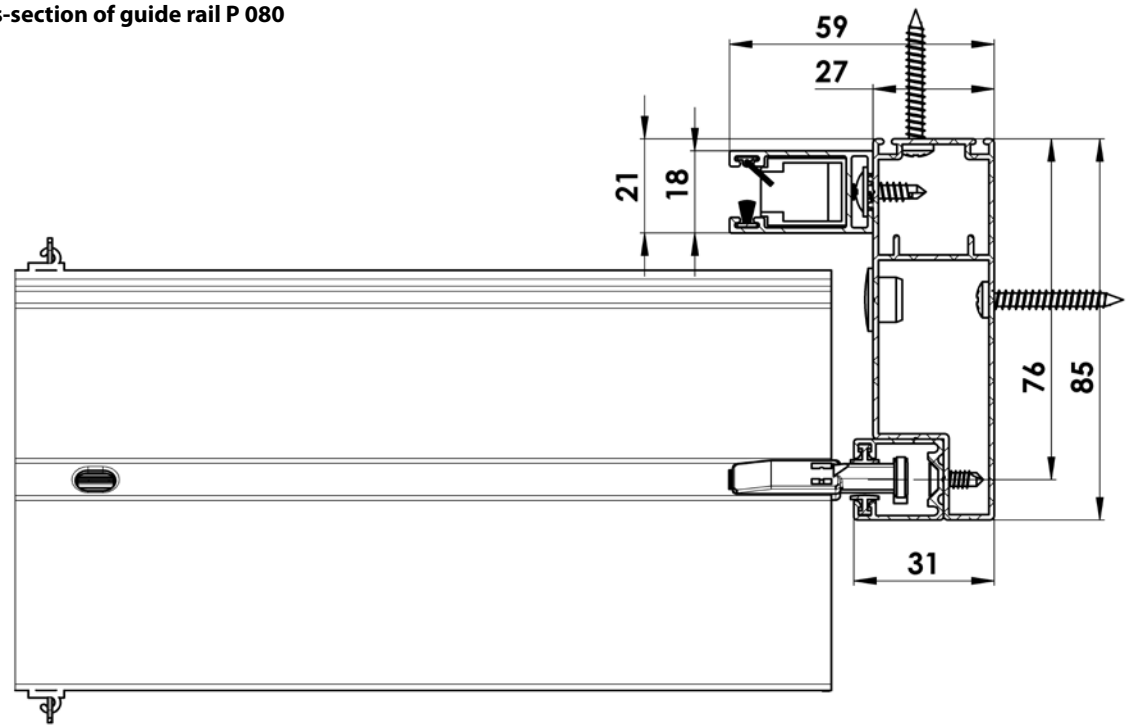

ISOTRA a.s.

Bílovecká 2411/1, 746 01 Opava
Czech Republic

Tel.: **+420 553 685 111**
E-mail: isotra@isotra.com

www.isotra.com

Released: 11/2026

ISOTRA Partner

... protecting your privacy.